iplex®

Technical Guide

Version 1.0 / December 2025

PVC Pressure Pipe and Fittings



1.0 **Introduction** 4
1.1 What is PVC-U? 4
1.2 What is modified PVC or PVC-M? 4
1.3 What is orientated PVC or PVC-O? 4
1.3 Applications of PVC pipes 4

2.0 **Sustainability** 5
2.1 Environmental Product Declaration (EPD) 5
2.2 Best Environmental Practice - PVC 5
2.3 Temperature effect on pressure rating 5
2.4 Chemical resistance 5

3.0 **Iplex PVC-U pipe system** 6
3.1 Features and benefits PVC-U 6
3.2 Material properties PVC-U 7
3.3 Standards and testing 8
3.3.1 Rubber ring seals 8
3.3.2 Certifications 8
3.4 Colour and markings 8
3.5 PVC-U product coding 9
3.6 PVC-U pressure pipe dimensions 9
3.7 PVC-U flow capacity determination 10
3.8 PVC-U pressure class selection 11
3.9 PVC- U water hammer surges and cyclical dynamic stress effects 14

4.0 **Iplex Rhino PVC-M pipe system** 16
4.1 Features and benefits 16
4.2 Material properties 17
4.3 Standards and testing 18
4.4 Rubber rings 18
4.5 Certificates 18
4.6 Colour and marking 18
4.7 PVC-M product coding 19
4.8 Product dimension 19
4.9 PVC-M flow capacity determination 22
4.10 PVC-M pressure class selection 22
4.11 PVC-M water hammer surges and cyclical effects 25

5.0 **Iplex Apollo PVC-O pipe system** 27
5.1 Features and benefits 27
5.2 Material properties 29
5.3 Standards and testing 30
5.4 Certificates 30
5.5 Colour and marking 30
5.6 PVC-O product coding 31
5.7 Product dimension 31
5.8 PVC-O flow capacity 32
5.9 PVC-O pressure class selection 32
5.10 PVC-O water hammer surges and cyclical effects 34

6.0 **Storage and handling** 36
6.1 Handling 36
6.2 Storage 36
6.3 Cleaning 36

7.0 **Lubricants for rubber ring joints** 37
7.1 Iplex rubber ring lubricant 37
7.2 Solvent cement and primer 37

8.0 **Design considerations** 38
8.1 Flexible pipe design 38
8.2 Minimum cover heights – AS/NZS 2566 38
8.3 Thrust block design for fittings 38

9.0 **Installation** 41
9.1 Trenching 41
9.2 Embedment and backfilling 41
9.3 Cleaning 41

10.0 **Jointing methods** 42
10.2.1 How solvent cement works 42
10.2.2 The importance of Iplex priming fluids 42
10.2.3 Tools required 42
10.2.4 Iplex solvent cement 42
10.2.5 Storage of solvent cement and primer 43
10.2.6 Safety precautions 43
10.2.7 Jointing instructions 44
10.3 Iplex lubricant 46
10.3.1 Storage of lubricants 46
10.3.2 Safety precautions 46
10.4 Placing pipes into trenches 46
10.5 Ring jointing instructions 46
10.5.1 Tools required 47
10.5.2 Cutting pipes if required 47
10.5.3 Chamfer and witness mark details 47

11.0 **PVC-U Pressure fittings for solvent cement jointing** 48
11.1 Fittings 48
11.2 PVC-U fittings 48
10.3 Raccord plast large diameter PVC-U fittings 67

12.0 **Ductile iron fittings** 69
12.1 Ductile iron fittings S1 and S2 69



Important disclaimer

This document provides technical information about the Iplex product range. It is subject to change without notice. Iplex does not provide design or other professional services and this document must not be relied upon as such. Before purchasing goods, always seek independent expert advice on the suitability of the goods for the intended purpose or their application. Any safety information is provided as a guide only and any reliance on or use of any such information is at your own risk. Except as provided in Iplex's terms and conditions of sale for these goods, and to the extent permitted by law, Iplex is not liable for any direct or indirect loss, damage or injury suffered by persons who rely on the information contained in this document. The designs, graphics, logos, trademarks and other intellectual property contained in this document are owned by or licensed to Iplex and you must not use, reproduce, or otherwise deal with the content without Iplex's prior written consent.

Copyright© 2025. All rights reserved. Iplex Pipelines Australia Pty Limited ABN 56 079 613 308.

1.0 Introduction

1.1 What is PVC-U?

PVC pressure pipes are manufactured from unplasticized polyvinyl chloride polymer (a thermoplastic material) using the extrusion process.

Introduced in Australia in the early 1960s, PVC-U pipes are widely used for water supply, irrigation, and sewerage systems due to their high strength-to-weight ratio and resistance to corrosion and chemical attack.

A PIPA (Plastics Industry Pipe Association of Australia) report confirmed the long-term durability of these pipes through an investigation of 600 km of PVC pressure pipes installed in the 1970s as part of the Millewa Waterworks District Scheme*. Iplex PVC-U pipes meet the AS/NZS 1477 standard and the WSAA Water Supply Code WSA 03.

*https://pvc4pipes.com/wp-content/uploads/2023/11/PIPA-TP006-Long-Term-Performance-of-PVC-Pressure-Pipes-August-2012.pdf



PVC-U irrigation pipe installation.

1.2 What is modified PVC or PVC-M?

Iplex Rhino® represents modified PVC (PVC-M), a variation of traditional PVC pressure pipes enhanced with an impact modifier for increased toughness and ductility.

Introduced to Australia in 1997, PVC-M pipes are tougher and designed with thinner wall section versus PVC. This offers material efficiencies and improved hydraulic properties due to the larger effective internal diameter. These pipes balance strength, toughness and ductility by optimizing formulation and processing, thus achieving the full benefits of the modifier.

1.3 What is orientated PVC or PVC-O?

Iplex Apollo® Premium is a biaxially oriented PVC pressure pipe designed for water supply infrastructure. Using patented Biaxial Extrusion process, the pipe's molecular structure is primarily oriented in the Circumferential Direction (CD) but also longitudinally. This enhances physical properties such as hoop strength, impact resistance, ductility, fatigue resistance, and reduced weight.

This advanced method results in a high-performance thermoplastic pipe with increased hydraulic capacity.

1.3 Applications of PVC pipes

Iplex PVC pipes have been extensively used since the 1970s in various applications, including:

- Drinking water supply trunk and reticulation mains.
- Irrigation and turf watering systems.
- Industrial process pipelines.
- Effluent pipelines for pumped sewage, pressure sewers, and industrial wastes.
- Slurry pipelines for abrasive and corrosive materials.

PVC pipes offer advantages such as corrosion resistance, economic installation, operational efficiencies, and reduced maintenance costs.

2.0 Sustainability

2.1 Environmental Product Declaration (EPD)

The EPD for PVC pressure pipes quantifies environmental impacts based on Product Category Rules (PCR). It:

- Conforms to ISO14025 and EN15804 standards.
- Is verified by an independent third party.
- Covers at least a cradle-to-gate scope.
- Provides product-specific results.

The EPD results are applicable for Whole of Life Cycle assessments under Green Star and Infrastructure Sustainability Rating Tools. Refer to the PVC Pressure Pipes EPD for converting results from kilogram of installed pipe to pipe length.

2.2 Best Environmental Practice - PVC

A Best Environmental Practice PVC (BEP PVC) Certification adheres to the Best Environmental Practice – PVC guidelines as outlined in the Green Building Council of Australia (GBCA) literature review and best practice guidelines for the life cycle of PVC building products. This includes compliance with the relevant specified standards and Section 7 of the GBCA guidelines.

Refer to Iplex's BEP PVC Certification for the specific review of Iplex's technical documentation aligned to a number of standards for:

- Manufacture of PVC resin.
- Manufacture and end of life management of PVC products.
- Use of PVC recyclate in PVC products.

2.3 Temperature effect on pressure rating

PVC pipes are suitable for service temperatures between 0°C and 50°C. For temperatures above 20°C, provision must be made for pressure re-rating in accordance with Table 2.1.

Table 2.1 - Thermal re-rating factors

Maximum service temperature (°C)	Multiplication factor for pressure re-rating
20	1.0
30	0.87
40	0.7
50	0.58

*Based on PIPA technical note TN003.

2.4 Chemical resistance

PVC pipes and elastomeric seals resist many chemicals, as detailed on the Iplex website Chemical Resistance Guide or in PocketEngineer. This guide is based on extensive research and data from both international and local sources.

While PVC is highly resistant to alkalis and acids, it should not be used with strong oxidizing agents, aromatic and chlorinated hydrocarbons, ketones, esters, and ethers. For critical applications, long-term testing is recommended.



3.0 Iplex PVC-U pipe system

3.1 Features and benefits PVC-U

Table 3.1 - Features and benefits

Features	Benefits
Internal/external corrosion resistance	Expected service life may be at least 100 years*
Electrically non conductive	Do not suffer from electrolytic corrosion
Reiber rubber ring	Reduced jointing effort and improved reliability
Light weight	Ease of handling and reduced laying costs

*When installed, operated and maintained in accordance with the relevant product standards and manufacturer's guides.



Drinking water PVC-U pipeline installed in roadway.



The light weight nature of PVC pipes allows ease of handling during installation.

3.2 Material properties PVC-U

The general physical properties of PVC-U are provided in Table 3.2.

Table 3.2 - Typical material properties PVC-U

Property	Value
Physical and mechanical	
Specific gravity	1.43 to 1.5
Effect on drinking water - AS/NZS 4020	Complies
Mean hoop stress at 20°C extrapolated to 50 years - AS/NZS 1462.6	<=DN150=23.6 MPa, >DN150=26.0 MPa
Fracture toughness - AS/NZS 1462.19	4.14 MPa m0.5
Hydrostatic design stress - AS/NZS 1477	<DN150=11.0 MPa >DN150=12.3 MPa
Flexural modulus -Calculated from the ring stiffness determined in accordance with ISO 9969	3200 MPa
Poisson's ratio	0.38 - 0.40
Thermal	
Coefficient of linear thermal expansion	7 x 10^{-5}/°C
Thermal conductivity	0.138 x 10-3 W/m.K
Specific heat	1045 J/kg.K
Maximum practicable working temperature	50°C
Fire resistance	
Flammability	Will not support combustion
Ignitability - AS 1530*	7
Smoke development - AS 1530*	9
Spread of flame - AS 1530*	0
Heat evolved - AS 1530*	2
*AWTA test report number 7-558803-CV	
Electrical	
Volume resistivity	1016 ohm.cm (60% RH)
Surface resistivity	1013 - 1014 ohm
Power factor	0.015 - 0.020 at 20°C
Dielectric constant	3.4 - 3.6 at 25°C (60 Hz)

3.3 Standards and testing

PVC-U pressure pipes and fittings are manufactured in accordance with Australia/New Zealand Standard *AS/NZS 1477 PVC Pipes and Fittings for Pressure Applications*.

Iplex PVC-U Series 1 (metric) pipes and associated materials are manufactured to relevant Australian Standards under third party certified quality management systems complying with AS/NZS ISO 9001.

3.3.1 Rubber ring seals

Iplex Rieber sealing rings comply with AS1646 'Elastomeric seals for waterworks purposes' and AS 681.1 Elastomeric Seals Part 1: Vulcanized rubber. They are manufactured from EPDM or SBR polymer.

Iplex uses a fixed ring system where the rings are installed during the manufacture of the pipe. This system locks the ring in place, preventing dislodgement of the ring during spigot insertion. Pre-compression of the rubber against the pipe socket ring groove surfaces dramatically reduces the risk of contamination between these sealing surfaces.

These seal rings can also be installed in the field if necessary, for example if damaged.

The seal rings conform to *AS/NZS 4020 - Testing of Products for use in Contact with Drinking Water.*

3.3.2 Certifications

Iplex PVC-U pressure pipes are independently certified as conforming to AS/NZS 1477. Iplex holds both WaterMark and StandardsMark (ISO Type 5) product certification licences.

SAi Global licence numbers,

Certified Product™

SMK1304 WMKA1304

SMK1058 WMKA1058

SMK1531 WMKA1531

Australian Standard and WaterMark



Above ground application - JCU.

3.4 Colour and markings

Iplex PVC-U Series 1 pressure pipes adhere to AS/NZS 1477 and WSAA product specification WSA PS 211 for colour coding, ensuring easy identification for various applications. Below is a summary of the colour codes used:

- **White:** Drinking water or irrigation applications
- **Purple/Lilac:** Recycled water applications
- **Cream:** Pressure sewerage applications

For other colour requirements, please contact your nearest Iplex Sales Office for assistance.



Iplex PVC-U Series 1 Pressure Pipe.

Pipes, such as PPS01225 (DN25 PN12 SWJ PVC-U pressure pipe x 6m), are marked with the following information:

- Manufacturer's name and brand
- Nominal pipe size (e.g., DN100)
- Designation as PVC-U pressure pipe
- Pressure rating (e.g., PN16)
- Date of manufacture
- Time of manufacture
- Manufacturer's code
- Compliance with AS/NZS 1477
- WaterMark / Product Certification licence number
- Iplex Pipeline Premium BEP PVC certification

These markings, repeated along the pipe, ensure compliance with AS/NZS 1477and facilitate traceability and quality assurance.



James Cook University Turtle Health Research centre.

3.5 PVC-U product coding

The product identification codes used by Iplex are given in the Table 3.3 below and are in the form of:

"XXXX(A)XXXXX(D)" - the brackets indicate the symbol is used only when required, as per examples provided below table.

Table 3.3 - Pipe coding PVC-U pressure

Product	Code	PN	Code	DN	Code	Effective length (m)	Code
PVC-U Series 1 - SWJ - White	PPSO	4.5	04	100	100	3.0	C
PVC-U Series 1 - SWJ - Lilac	PPSOL	6.0	06	150	150	4.0	D
		9.0	09	200	200	5.0	E
PVC-U Series 1 - RRJ - White	PPHO	12.0	12	225	225	6.0	
PVC-U Series 1 - RRJ - Lilac	PPHL	15.0	15	300	300		
PVC-U Series 1 - RRJ - Cream	PPHC	16.0	16	375	375		
PVC-U Series 1 - PLPL - Blue	PPPO	18.0	18				

Examples

The product code for RRJ DN200 PN16 Series 1 PVC-U pipe in 6m length is **PPHO16200**.

The product code for SWJ DN100 PN9 Series 1 PVC-U pipe in 6m length is **PPSO09100**.

3.6 PVC-U pressure pipe dimensions

PVC-U pressure pipes are available in both solvent weld joint (SWJ) and rubber ring joint (RRJ). DN15 up to and including DN150 pipes are available in solvent weld joint and DN80 up to and including DN375 pipes are available in rubber ring joint. Typical pipe dimensions are shown in Table 3.4 and 3.5.

Table 3.4 - Series 1 PVC-U (SWJ) pressure pipe dimensions

Nominal diameter DN	Mean outside diameter	PN4.5		PN6		PN9		PN12 (PN15*)		PN18	
		T	ID	T	ID	T	ID	T	ID	T	ID
15	21.4							1.5*	18.3*	1.8	17.8
20	26.8							1.5	23.7	2.2	22.4
25	33.6					1.5	30.5	1.9	29.8	2.7	28.1
32	42.3					1.9	38.5	2.4	37.5	3.4	35.4
40	48.3			1.5	45.2	2.1	44.1	2.7	42.8	3.9	40.5
50	60.4			1.8	56.8	2.6	55.2	3.3	53.7	4.9	50.5
65	75.4	1.7	72	2.2	71	3.2	68.9	4.2	67	6.1	63.2
80	88.9	2	84.9	2.6	83.7	3.8	81.3	4.9	79	7.1	74.6
100	114.3	2.5	109.3	3.2	107.8	4.8	104.6	6.3	101.7	9.1	96
125	140.2	3	134.1	4	132.2	5.9	128.4	7.6	124.9		
150	160.3	3.4	153.4	4.5	151.3	6.7	146.9	8.8	142.7	12.8	134.7

TABLE 3.5 – PVC-U (SWJ) pressure pipe series 1 pipe dimensions

Nominal Diameter DN	Socket length	Chamfer length	Maximum outside diameter of socket			
	SWJ	SWJ	PN6	PN9	PN12	PN18
15	36	3				25.3
20	36	3			30.1	31.5
25	36	3		363.9	37.7	39.3
32	36	3		46.4	47.4	49.4
40	49	3	51.6	52.8	54	56.4
50	62	3	64.3	65.9	67.3	70.5
65	62	3			84.1	87.9
80	75.0	3	94.5	96.0	99.1	103.5
100	101.0	3	121.3	9.0	127.5	133.1
125	128	3	148.8	152.6	156.0	
150	128.0	3	148.8	124.5	156.0	

Overall length of SWJ pipe = effective length + socket length.

Table 3.6 - PVC-U (RRJ) pressure pipe series 1 pipe dimensions

Nominal Diameter DN	RRJ - rubber ring joint							
	Insertion Length	Chamfer Length	Maximum outside diameter over ring groove (mm)					
	RRJ	RRJ	PN 4.5	PN 6	PN 9	PN 12	PN 15	PN 18
80	121	13	114.1	115.3	117.9	120.3	122.7	124.9
100	155	11	142.4	144	147.4	150.4	153.4	156.4
125								
150	146	18	193.9	196.1	200.7	205.1	209.3	213.5
200	173	17	269.8	272.8	278.4	284	289.4	294.8
225	180	25	295.6	298.8	305.2	311.4	317.4	323.4
250	194	27	330.2	333.8	341	347.8	354.6	361.2
300	201	30	366.7	370.9	378.7	386.5	394.1	401.5
375	236	35	461.2	466.4	476.4	486.4	496	505.4

Overall length of RRJ pipe = effective length + insertion length

Note:

All dimensions are in millimetres. T = average mean wall thickness

ID = average mean inside diameter

The standard effective length for all pipes is 6 m + 50 mm, -0 mm

Some sizes and classes are subject to minimum order quantities and availability at time of order

3.7 PVC-U flow capacity determination

The hydraulic capacity of a pipeline can vary due to various factors, which include:

- Growth of slime, which will vary with the age of the pipeline and available nutrient in the water.
- Roughening, due to wear by abrasive solids.
- Siltation or settlement of suspended particulate matter.
- Joint imperfections and fittings.

To assist the designer in selecting the appropriate pipe diameter, flow calculation software is available from Iplex which allows variation in fluid temperature and pipe roughness to suit site conditions. The flow calculator is available at www.iplex.com.au in the Tools section.

Alternatively flow resistance charts are shown in Figures 3.2 and 3.3. The flow resistance charts relate friction loss to discharge and velocity for pipes running full and have been calculated using the Colebrook-White transition equation in the form:

$$V = -2\sqrt{2gdS}\,\log\left(\frac{k}{3.7d} + \frac{2.5lv}{d\sqrt{2gdS}}\right)$$

where:

V = mean velocity (m/s)

g = acceleration due to gravity (m/s^2)

d = pipe internal diameter (m)

S = hydraulic gradient (m/m)

k = equivalent hydraulic roughness (m)

v = kinematic viscosity (m^2/s)

The Colebrook-White transition equation takes into account the variation in viscosity with temperature and pipe roughness and is recognised as being one of the most accurate in general use but requires an iterative solution.

The flow resistance charts shown in Figures 3.2 and 3.3 have been prepared based on a temperature of 20°C which corresponds to a kinematic viscosity for water v = 1.01 x 10-6 m2/s and equivalent pipe wall roughness co-efficient, k = 0.003 mm.

This value of the equivalent roughness coefficient "k" assumes the PVC-U pipeline is straight, clean and concentrically jointed without fittings. Possible values ranging between 0.003 to 0.015 mm are given in AS 2200 "Design Charts for Water Supply and Sewerage" for PVC. An approximate allowance for the effect of variation in water temperature can be made by increasing the chart value of the head loss by 1 % for each 3°C below 20°C and decreasing it by 1 % for each 3°C in excess of 20°C.

The hydraulic performance of a pipeline may be adversely affected if combined air release and anti-vacuum valves are not installed at local high points in each section of a pipeline, with a maximum spacing not exceeding 500m.

These are required to maintain full bore flow and limit the occurrence of sub atmospheric conditions.

3.8 PVC-U pressure class selection

The nominal pressure rating in kilopascals of a PVC pressure pipe is equal to PN multiplied by 100. This rated pressure should not be exceeded at any location in the pipeline by the maximum operating pressure including water hammer pressure surcharges.

When designing a pipeline, Class PN 6 should not be used for any vacuum conditions or operation with negative pressure.

PN 9 is the minimum class which should be used for vacuum or negative pressure conditions in a buried pipeline, provided pipes have been embedded in a properly compacted non-cohesive material (such as sand or gravel). The compacted embedment must fully surround the pipe.

Where the pipeline will be operating at elevated temperatures, for example greater than 20° C, the nominal rating should be multiplied by the re-rating factor given in Table 2.1.

Fatigue, dynamic stresses, surge pressures commonly known as 'water hammer' and structural considerations should also be considered when selecting the pipe class.

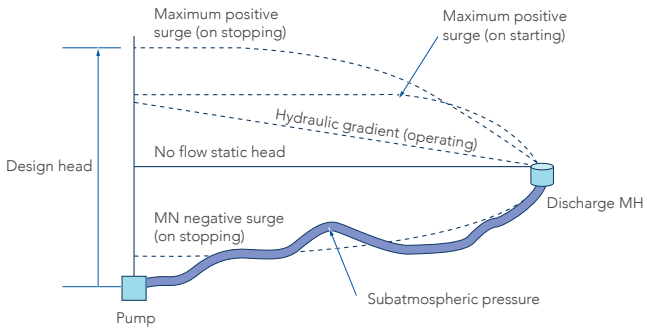

Figure 3.1 - Typical hydraulic grades and surge envelopes required for design.

Figure 3.2 - Flow resistance chart - PVC-U Pressure Pipe (Series 1) PN4.5, PN6 and PN9

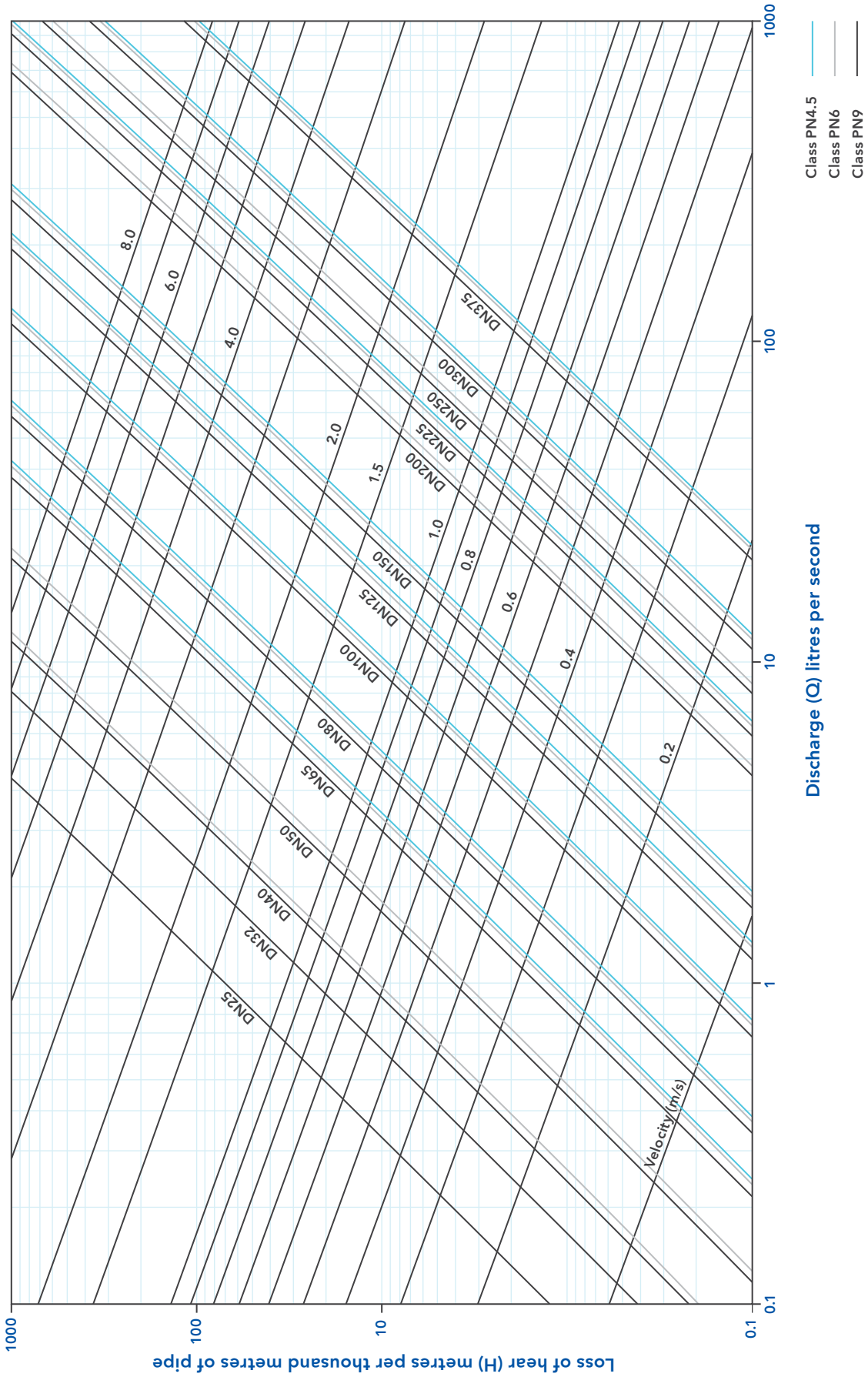

Note:
This chart has been prepared using the Colebrook White Formula with a roughness co-efficient k=-0.003mm.
This chart has been calculated for the viscosity of water at 20°C.

Figure 3.3 - Flow resistance chart - PVC-U Pressure Pipe (Series 1) PN12, PN15 and PN18

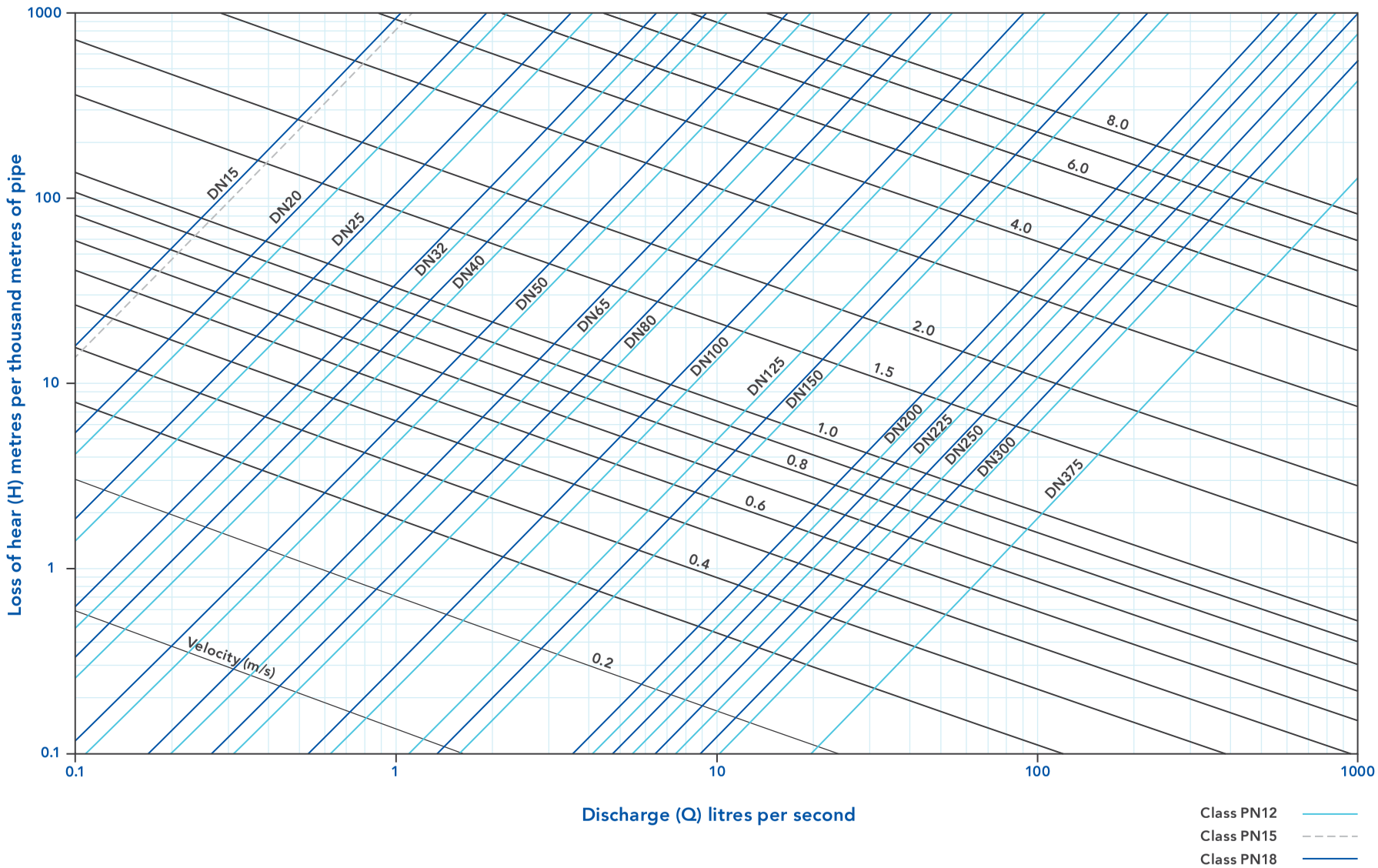

Note:

This chart has been prepared using the Colebrook White Formula with a roughness co-efficient k=-0.003mm.

This chart has been calculated for the viscosity of water at 20°C.

3.9 PVC- U water hammer surges and cyclical dynamic stress effects

Water hammer effects in thermoplastic materials are considerably reduced compared with ductile iron, steel and concrete due to the much lower modulus of elasticity.

Where repeated pressure variations occur in PVC-U pipeline, (a pump switching on and off in a rising main) it may be necessary to consider the effect of fatigue over the life of the pipeline.

The designer should take into account the frequency of the cyclic pressure fluctuations during the life of the pipeline. The amplitude of the pressure change between the maximum and minimum operating pressures, including all transients when divided by the load factor given in Table 3.7 should not exceed the nominal pressure class rating of the pipeline.

In practice the pressure changes in water reticulation systems are seldom of sufficient amplitude and frequency for fatigue to affect pipe class selection, but they can be an important consideration for sewer rising mains.

Table 3.7 - PVC-U fatigue load factors

Total cycles	Approximate number of cycles / days for 100 year life	Fatigue cycle factor f
26400	1	1
100000	3	1
200000	5.5	0.81
500000	14	0.62
1000000	27	0.50
2500000	82	0.38
5000000	137	0.38
10000000	274	0.38

Reference: PIPA Industry Guidelines "PVC Pressure Pipes, Design for Dynamic Stresses'' POP 101- Issue 1.4.

The frequency is defined as the number of combined pump start and stop cycles. If an allowance is considered necessary to allow for attenuation of water hammer oscillations, the frequency can then be taken as being twice the number of start/ stop cycles. (It can be shown mathematically that this is appropriate for the exponential decay typical of pressure surge oscillations).

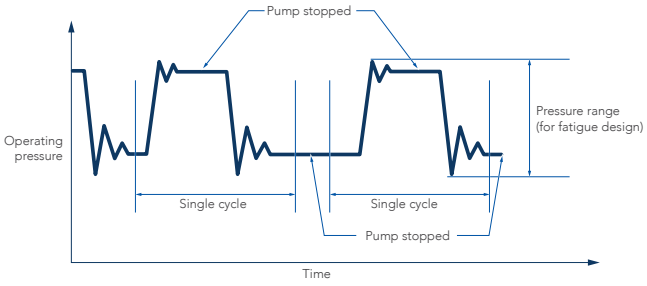

Figure 3.4 – Inputs for fatigue design - pressure amplitude and frequency.

The dynamic fatigue consideration requires a pipe to be selected with a pressure rating which, when multiplied by the fatigue factor, will give a value (Maximum Cyclic Pressure Range) greater than the pressure range or amplitude (See Figure 3.5 for typical fatigue loading considerations when selecting PVC-U pipe pressure classes for cyclic applications). Please refer to PIPA POP101 including PVC Pressure Pipes design for dynamic stresses.

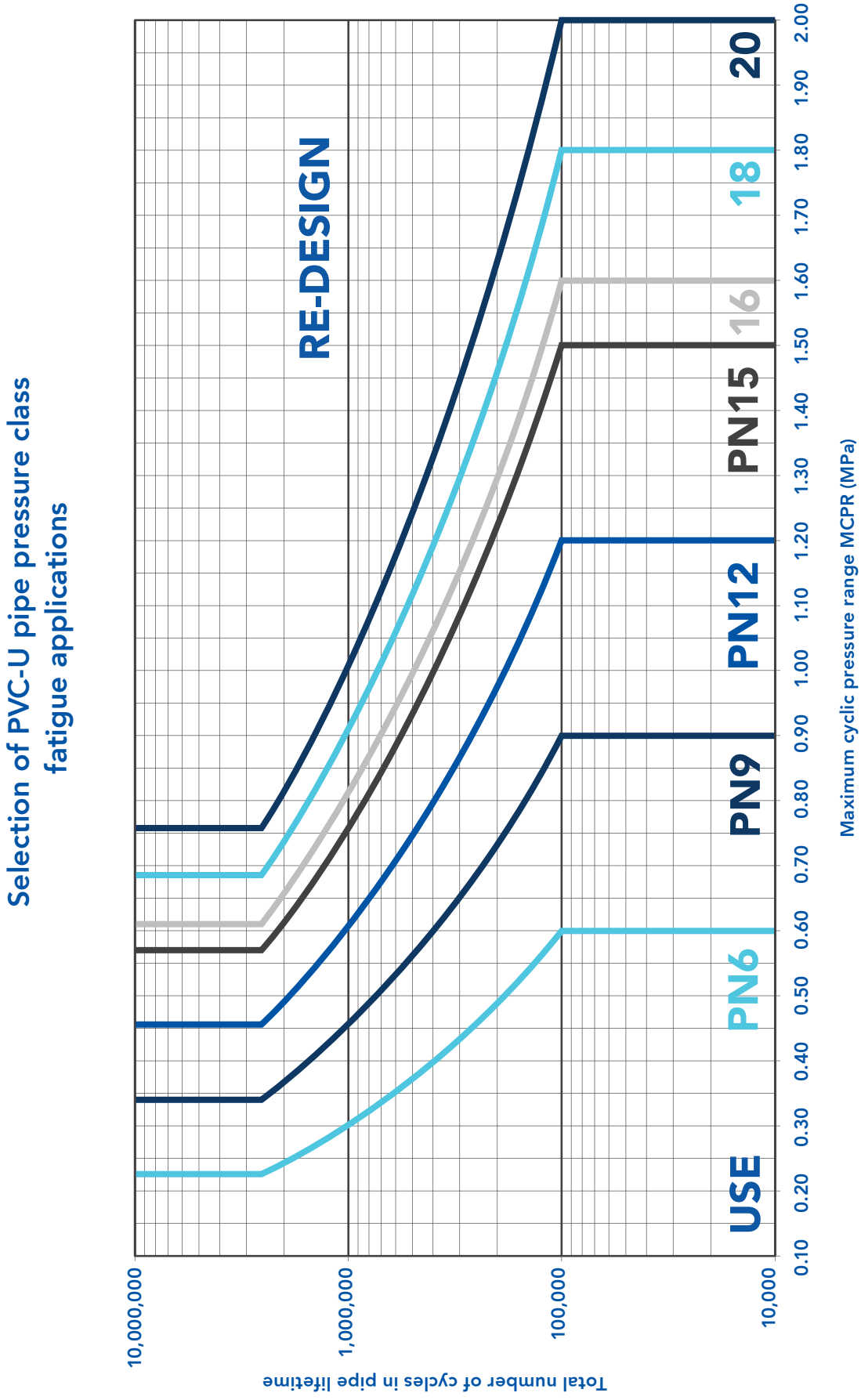

Figure 3.5 - Fatigue loading chart

4.0 Iplex Rhino PVC-M pipe system

4.1 Features and benefits

Table 4.1 - Features and benefits of PVC-M Rhino

Features	Benefits
Toughness and ductility	Easier handling and installation.
Corrosion resistance both internally and externally	Expected service life may be at least 100 years*
PVC-M pipe dimensions are compatible with existing AS/NZS 1477-Series 1 and Series 2 pipe systems	Interchangeable with PVC-U pipes and Series 2 ductile iron, GRP and AC.
Flexibility	PVC-M Rhino pipes can be easily curved to a minimum radius on site.
High quality rubber ring joint with a factory fitted Rieber rubber ring.	Provides a secure joint, which is easy to assemble and join.
Light weight	Approximately 30% lighter than PVC-U improving on site handling and laying efficiencies.

*When installed, operated and maintained in accordance with the relevant product standards and manufacturer's guides.



Wimerra Mallee project.

4.2 Material properties

Table 4.2 - Physical properties Rhino PVC-M

Property	Value
Physical and mechanical	
Specific gravity	1.42
Vicat softening temperature	>=79°C
Effect on drinking water - AS/NZS 4020	Complies
Short term minimum hoop stress at 1 hour and 20°C	38.0 MPa
Minimum required strength 'MRS' at 20°C extrapolated to 50 years representing the 97.5% lower predicted limit	24.5 Mpa
Minimum notched hoop strength at 20°C extrapolated to 50 years	24.5 MPa
Hydrostatic design stress - AS/NZS 4765	17.5 MPa
Flexural modulus -Calculated from the ring stiffness determined in accordance with ISO 9969	3000 MPa
Poisson's ratio	0.38 - 0.40
Thermal	
Coefficient of linear thermal expansion	7×10^{-6} /°C
Thermal conductivity	0.138 - 0.150 W/m.K
Specific heat	1045 J/kg.K
Maximum practicable working temperature	50°C
Fire resistance	
Flammability	Will not support combustion
Ignitability - AS 1530*	7
Smoke development - AS 1530*	9
Spread of flame - AS 1530*	0
Heat evolved - AS 1530*	2
*AWTA test report number 7-558803-CV	
Electrical	
Volume resistivity	1016 ohm.cm (60% RH)
Surface resistivity	1013 - 1014 ohm
Power factor	0.015 - 0.020 at 20°C
Dielectric constant	3.4 - 3.6 at 25°C (60 Hz)

4.3 Standards and testing

Blue Rhino and White Rhino PVC-M pipes adhere to AS/NZS 4765, which governs modified PVC (PVC-M) pipes for pressure applications.

Iplex Rhino - PVC-M pressure pipes and materials are produced to meet stringent Australian Standards under third-party certified quality management systems compliant with AS/NZS ISO 9001.

4.4 Rubber rings

Iplex Rieber sealing rings comply with AS1646 'Elastomeric seals for waterworks purposes' and AS 681.1 Elastomeric Seals Part 1: Vulcanized rubber. They are manufactured from EPDM or SBR polymer.

Iplex use a fixed ring system where the rings are installed during the manufacture of the pipe. This system locks the ring in place, preventing dislodgement of the ring during spigot insertion. Pre-compression of the rubber against the pipe socket ring groove surfaces dramatically reduces the risk of contamination between these sealing surfaces.

These seal rings can also be installed in the field if necessary, for example if damaged.

The seal rings conform to *AS/NZS 4020 - Testing of Products for use in Contact with Drinking Water.*

4.5 Certificates

Iplex Rhino PVC-M pressure pipes are independently certified as conforming to AS/NZS 4765. Iplex holds both WaterMark and StandardsMark (ISO Type 5) product certification licences.

SAI Global licence numbers,

Certified Product™

SMK02748 WMKA02748

SMK02468 WMKA02468

Australian Standard and WaterMark

4.6 Colour and marking

Iplex Rhino PVC-M pipes are colour-coded per AS/NZS 4765 and WSAA product specification WSA PS 209 to differentiate between various applications.

The colours used are as follows:

- **White Rhino (Series 1):** Drinking water applications (white)
- **Blue Rhino (Series 2):** Drinking water applications (blue)
- **Series 1 and Series 2:** Recycled water applications (purple/lilac)
- **Series 1 and Series 2:** Pressure sewer applications (cream)

Markings on the pipes include:

- Manufacturer's name and brand
- Nominal pipe size (e.g., DN100)
- PVC-M pressure pipe designation
- Pressure rating (e.g., PN16)
- Date of manufacture
- Time of manufacture
- Manufacturer's code
- AS/NZS 4765 compliance
- Product certification licence number
- Iplex Pipeline Premium BEP PVC certification

These markings, which are repeated at defined intervals along the length of the pipe, allow for easier identification and meet the traceability requirements of AS/NZS 4765.



4.7 PVC-M product coding

The product codes used by Iplex are provide in Table 4.3 below and are in the form of:

"XXXX(A)XXXXX(D)" - the brackets indicate the symbol is used only when required as per examples provided below table.

Table 4.3 - Pipe coding Rhino PVC-M

Product	Code	PN	Code	DN	Code	Effective length (m)	Code
Rhino Series 1 - RRJ - White	PPHR	6.0	06	100.0	100	3.0	C
Rhino Series 1 - RRJ - Lilac	PPHRL	9.0	09	150.0	150	4.0	D
Rhino Series 1 - RRJ - Cream	PPHRC	12.0	12.0	200.0	200	5.0	E
Rhino Series 2 - RRJ - Blue	PDHR	15.0	15.0	225.0	225	6.0	
Rhino Series 2 - RRJ - Cream	PDHRC	16.0	16.0	300.0	300		
Rhino Series 2 - RRJ - Lilac	PDHRL	18.0	18.0	375.0	375		
Rhino Series 2 - RRJ - White	PDHRW	20.0	20.0	450.0	450		
Rhino Series 2 - PLPL - Blue	PDPR			500.0	500		
Rhino Series 2 - PLPL - Cream	PDPRC			575.0	575		

For Special Lengths, Colours and Printing please contact Iplex sales.

Examples

The product code for DN200 PN16 Blue Rhino Series 2 PVC-M pipe in 6m length is **PDHR16200**.

The product code for DN300 PN12 Cream Rhino Series 1 PVC-M pipe in 6m length is **PPHRC12300**.

4.8 Product dimension

Iplex manufactures White Rhino as Series 1 pipe and Blue Rhino as Series 2 pipe, however Purple Rhino and Cream Rhino can be supplied in Series 1 or Series 2 pipe as required.

Tables 4.4 and 4.5 provide general details for Series 1 and Series 2 pipes respectively.

Table 4.4 - Rhino (Series 1) pipe dimensions

Nominal diameter DN	Mean outside diameter	PN6		PN9		PN12		PN15		PN18	
		T	ID	T	ID	T	ID	T	ID	T	ID
100	114.3	3.2	107.9	3.2	107.9	4.1	106.1	5.1	104.1	6.0	102.3
150	160.3	3.7	152.9	4.3	151.7	5.7	148.9	7.1	146.1	8.3	143.7
200	225.3	5.2	214.9	6.1	213.1	8.0	209.3	9.9	205.5	11.7	201.9
225	250.4	5.8	238.8	6.7	237.0	8.8	232.8	10.9	228.6	13.1	224.2
250	280.4	6.4	267.6	7.5	265.4	9.9	260.6	12.4	255.6	14.5	251.4
300	315.5	7.2	301.1	8.4	298.7	11.2	293.1	13.8	287.9	16.3	282.9
375	400.5	9.2	382.1	10.6	379.3	14.1	372.3	17.5	365.5	20.7	359.1
450*	500.5	11.8	476.9	13.8	472.9	18.1	464.3				
500*	560.5	13.2	534.1	15.5	529.5	20.3	519.9				
575*	630.5	14.7	601.1	17.3	595.9	22.8	584.9				

Note: *These sizes are made to order only.

Table 4.5 Rhino (Series 2) pipe dimensions

Nominal diameter DN	Mean outside diameter	PN6		PN9		PN12		PN15		PN18	
		T	ID	T	ID	T	ID	T	ID	T	ID
100	121.9			4.4	113.1	5.7	110.5	6.4	109.1	7.1	107.7
150	177.4			6.3	164.8	8.3	160.8	9.2	159.0	10.2	157.0
200	232.3			8.2	215.9	10.8	210.7	12.0	208.3	13.3	205.7
225	259.3	7.0	245.3	9.2	240.9	12.0	235.3	13.4	232.5	14.8	229.7
250	286.2	7.7	270.8	10.1	266.0	13.3	259.6	14.8	256.6	16.4	253.4
300	345.4	9.3	326.8	12.2	321.0	16.0	313.4	17.8	309.8	19.7	306.0
375	426.2	11.4	403.4	14.9	396.4	19.7	386.8	22.0	382.2	24.3	377.6
450*	507.0	13.5	480.0	17.8	471.4	23.4	460.2				
500*	560.3	18.4	523.5	20.3	519.7						

Note: *These sizes are made to order only.

All dimensions are in millimetres. T = average mean wall thickness.

ID = average mean inside diameter.

The standard effective length for all pipes is 6m+50/-0mm.

Table 4.6 Rhino Series 1 pipe dimensions

Nominal diameter DN	RRJ - rubber ring joint						
	Insertion length	Chamfer length	Maximum outside diameter over ring groove (mm)				
			PN 6	PN 9	PN 12	PN 15	PN 18
100	155.0	19.0	143.8	144.8	146.8	149.0	205.7
150	166.0	17.0	195.5	197.1	199.7	202.7	287.2
200	199.0	21.0	272.8	274.8	279.0	283.0	314.8
225	203.0	23.0	299.0	301.0	305.6	310.2	351.4
250	220.0	25.0	333.6	336.2	341.2	346.6	390.7
300	227.0	27.0	370.5	373.1	379.1	384.9	491.2
375	262.0	32.0	465.8	469.4	476.6	484.2	612.6
450*	209.0	38.0	581.0	585.2	594.4	604.2	682.7
500*	327.0	42.0	647.1	652.1	662.3	673.3	
575	350.0	45.0					

Overall Length of RRJ pipe = Effective length + Insertion length.

Table 4.7 - Rhino Series 2 pipe dimensions

	RRJ - rubber ring joint					
	Insertion length	Chamfer length	Maximum outside diameter over ring groove (mm)			
Nominal diameter DN	RRJ	RRJ	PN 6	PN 9	PN 12	PN 15
100	152.0	15.0			154.7	157.7
150	174.0	18.0			217.1	221.5
200	201.0	21.0			281.7	287.5
225	209.0	22.0	305.7	307.7	312.5	319.1
250	218.0	23.0	335.6	338.0	343.4	350.2
300	234.0	26.0	402.2	405.2	411.6	419.8
375	280.0	30.0	492.9	496.7	504.7	515.1
450*	307.0	32.0	583.1	587.5	596.9	609.3
500*	320.0	42.0				

Overall Length of RRJ pipe = Effective length + Insertion length.

The diagrams below provide a visual reference for the dimensional details listed in the above tables. They show key features such as effective length, insertion length, witness marks, and other measurements relevant to jointing and installation.

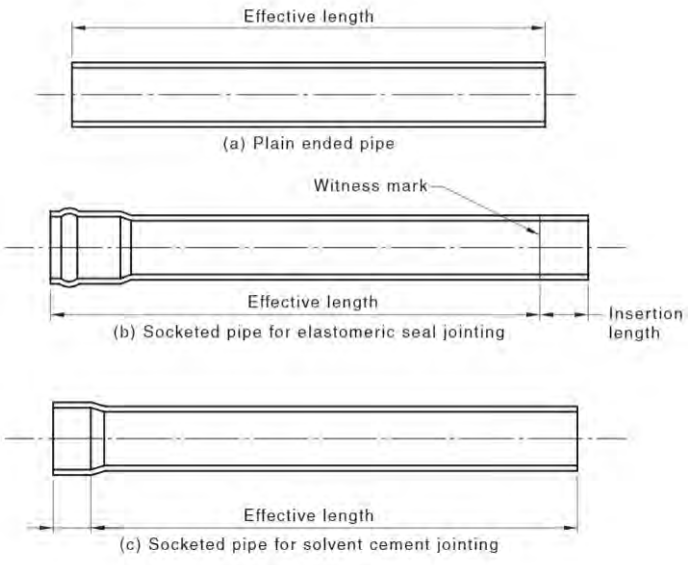

4.9 PVC-M flow capacity determination

The hydraulic capacity of a pipeline can vary due to various factors, which include:

- Growth of slime, which will vary with the age of the pipeline and available nutrient in the water.
- Roughening, due to wear by abrasive solids.
- Siltation or settlement of suspended particulate matter.
- Joint imperfections and fittings.

To assist the designer in selecting the appropriate pipe diameter, 'flow calculation software' is available from Iplex which allows variation in fluid temperature and pipe roughness to suit site conditions. The flow calculator is available at www.iplex.com.au in the Tools section.

Alternatively flow resistance charts for both White Rhino Series 1 and Blue Rhino Series 2 PVC-M pipes are shown in figures 4.2 and 4.3 respectively. The flow resistance charts relate friction loss to discharge and velocity for pipes running full and have been calculated using the Colebrook-White transition equation in the form:

$$V = -2\sqrt{2gdS}\,\log\left(\frac{k}{3.7d} + \frac{2.5lv}{d\sqrt{2gdS}}\right)$$

where:

V = mean velocity (m/s)

g = acceleration due to gravity (m/s^2)

d = pipe internal diameter (m)

S = hydraulic gradient (m/m)

k = equivalent hydraulic roughness (m)

v = kinematic viscosity (m^2/s)

The Colebrook-White transition equation takes into account the variation of viscosity with temperature and pipe roughness and is recognized as being one of the most accurate in general use, but requires an iterative solution.

The flow resistance charts in Figures 4.2 and 4.3 have been prepared based on a temperature of 20°C which corresponds to a kinematic viscosity for water v = 1.01 x 10-6 m2/s and equivalent pipe wall roughness co-efficient, k = 0.003 x 10-3 m.

This value of the equivalent roughness coefficient "k'' assumes the PVC-M pipeline is straight, clean and concentrically jointed without fittings. Possible values ranging between 0.003 to 0.015 mm are given in AS 2200 "Design Charts for Water Supply and Sewerage" for PVC. An approximate allowance for the effect of variation in water temperature can be made by increasing the chart value of the head loss by 1 % for each 3°C below 20°C and decreasing it by 1 % for each 3°C in excess of 20°C.

The hydraulic performance of a pipeline may be adversely affected if combined air release and anti-vacuum valves are not installed at local high points in each section of a pipeline, with a maximum spacing not exceeding 500m. These are required to maintain full bore flow and limit the occurrence of sub atmospheric conditions.

4.10 PVC-M pressure class selection

The nominal pressure rating in kilopascals (kPa) of a modified PVC pressure pipe (PVC-M) is equal to PN multiplied by 100. The pressure rating should not be exceeded at any location in the pipeline including water hammer pressure surcharges.

Where the pipeline will be operating at elevated temperatures, for example greater than 20° C, the nominal rating should be multiplied by the re-rating factor given in Table 2.1.

Fatigue, dynamic stresses, surge pressures commonly known as 'water hammer' and structural considerations should also be considered when selecting the pipe class.

Note: PN12 is the minimum class which should be used for vacuum or negative pressure conditions in a buried pipeline, provided pipes have been embedded in a properly compacted non-cohesive material (such as sand or gravel). The compacted embedment must fully surround the pipe.

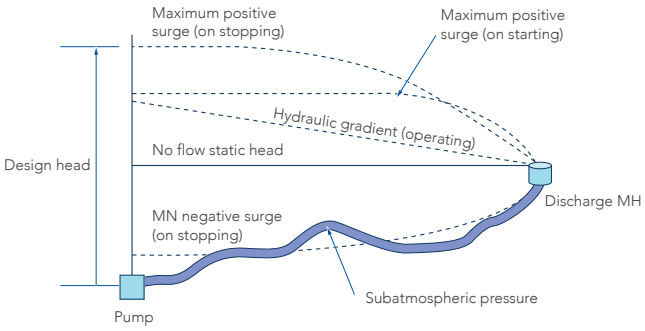

Figure 4.1 – Typical hydraulic grades and surge envelopes required for design.

Figure 4.2 - Flow resistance chart - White Rhino™ Pressure Pipe Series 1

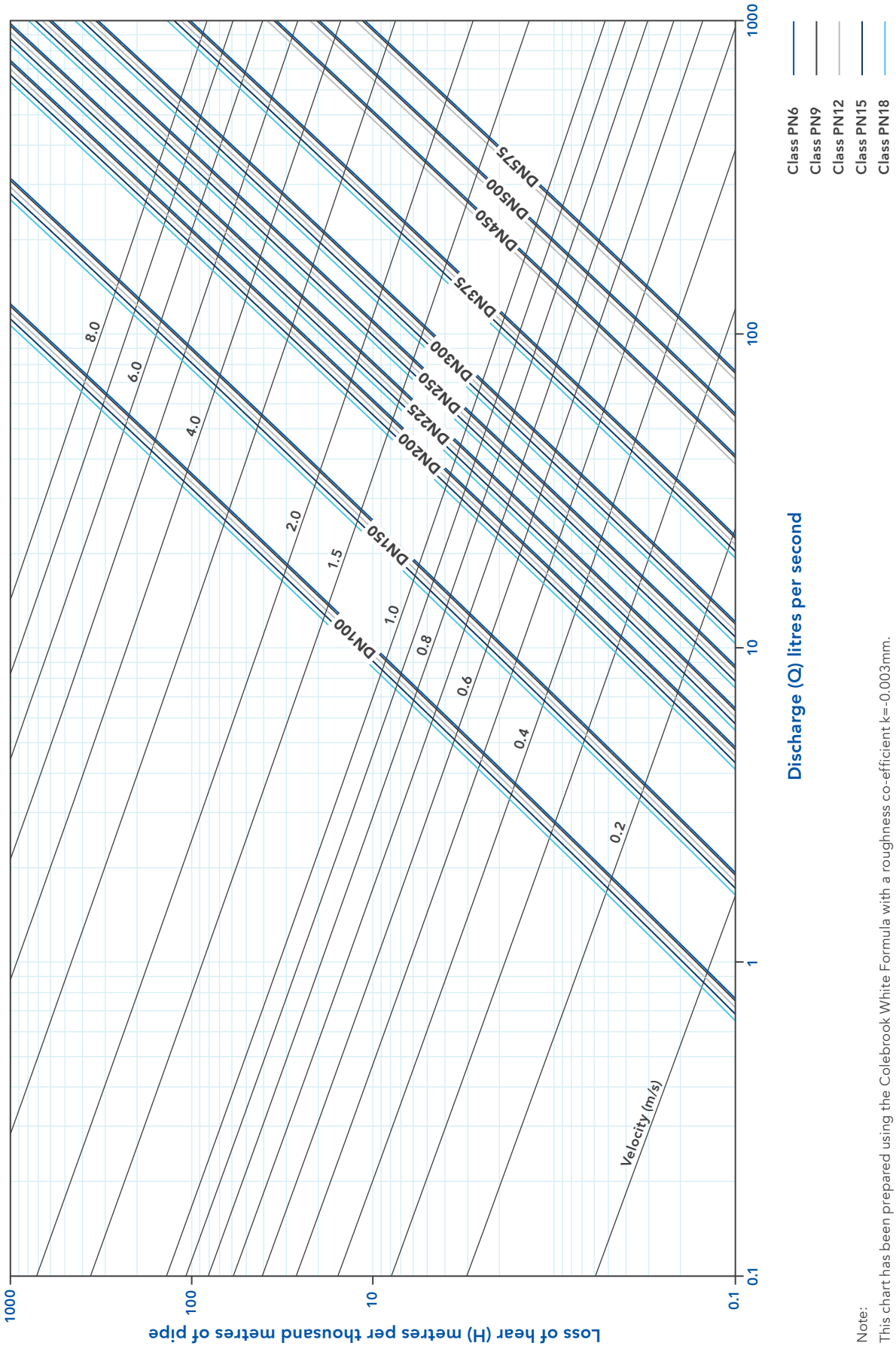

Note:
This chart has been prepared using the Colebrook White Formula with a roughness co-efficient k=-0.003mm.
This chart has been calculated for the viscosity of water at 20°C.

Figure 4.3 - Flow resistance chart - Blue Rhino™ Pressure Pipe Series 2

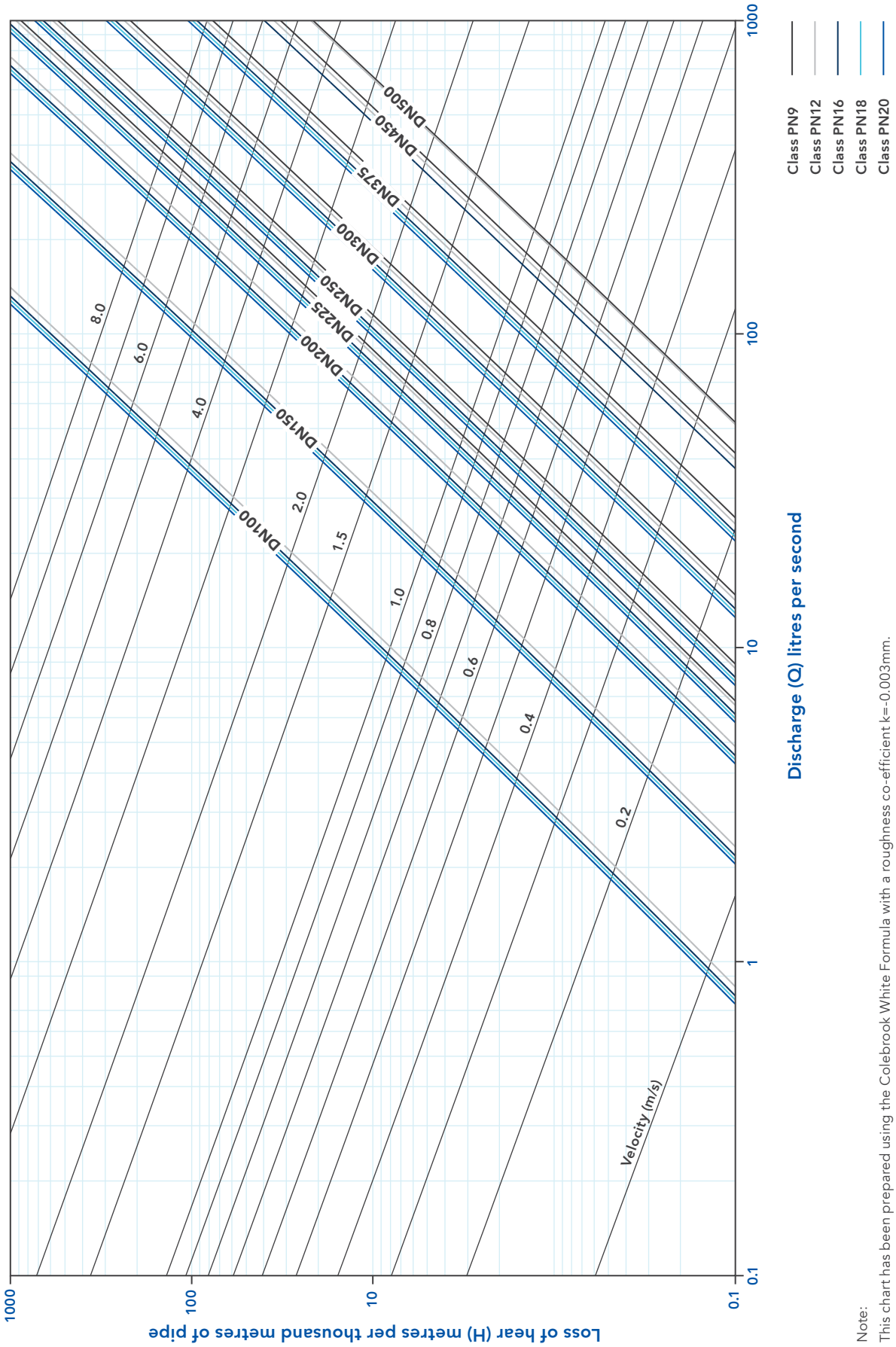

Note:
This chart has been prepared using the Colebrook White Formula with a roughness co-efficient k=-0.003mm.
This chart has been calculated for the viscosity of water at 20°C.

4.11 PVC-M water hammer surges and cyclical effects

Water hammer effects in thermoplastic materials are considerably reduced compared with ductile iron steel and concrete due to the much lower modulus of elasticity.

PVC-M has characteristics similar to PVC-U, with respect to fatigue under cyclical pressures. The designer should take into account the frequency of the cyclic pressure fluctuations during the life of the pipeline. The amplitude of the pressure change between the maximum and minimum operating pressures, including all transients when divided by the load factor given in Table 4.8 should not exceed the nominal pressure class rating of the pipeline.

In practice the pressure changes in water reticulation systems are seldom of sufficient amplitude and frequency for fatigue to affect pipe class selection, but they can be an important consideration for sewer rising mains.

Table 4.8 - PVC-U fatigue load factors

Total cycles	Approximate number of cycles / days for 100 year life	Fatigue cycle factor f
26400	1	1.00
100000	3	0.67
200000	5.5	0.54
500000	14	0.41
1000000	27	0.33
2500000	82	0.25
5000000	137	0.25
10000000	274	0.25

Reference: PIPA Industry Guidelines "PVC Pressure Pipes, Design for Dynamic Stresses" Issue 1.2 POP101.

The frequency is defined as the number of combined pump start and stop cycles. If an allowance is considered necessary to allow for attenuation of water hammer oscillations, the frequency can then be taken as being twice the number of start/ stop cycles. (It can be shown mathematically that this is appropriate for the exponential decay typical of pressure surge oscillations).

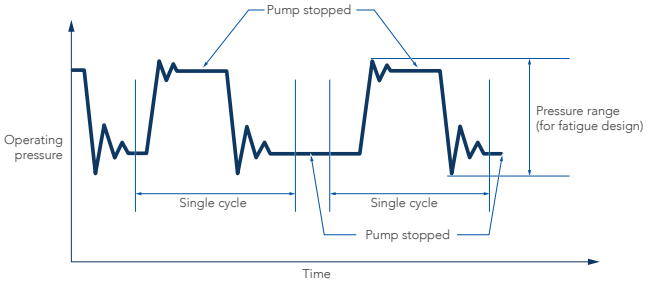

Figure 4.4- Inputs for fatigue design - pressure amplitude and frequency.

The dynamic fatigue consideration requires a pipe to be selected with a pressure rating which, when multiplied by the fatigue factor, will give a value (Maximum Cyclic Pressure Range) greater than the pressure range or amplitude (See Figure 4.5 for typical fatigue loading considerations when selecting PVC-U pipe pressure classes for cyclic applications).

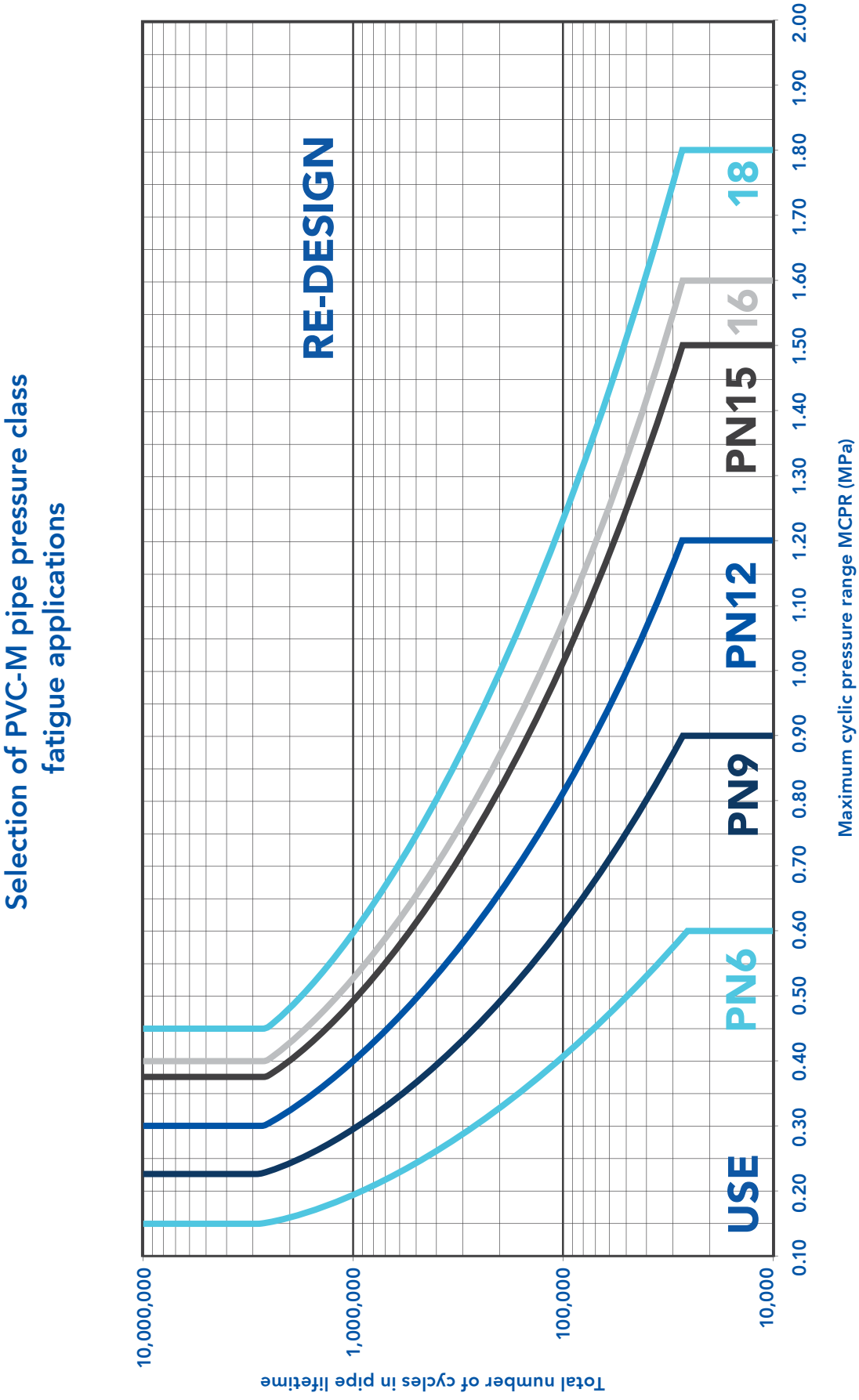

Figure 4.5 - Fatigue loading chart

5.0 Iplex Apollo PVC-O pipe system

5.1 Features and benefits

Polymer orientation is a well-established technique used to enhance the properties of products such as packaging tapes and films. This process involves stretching the material under controlled conditions to increase strength in the desired direction. For example, stretching packaging tape lengthwise significantly increases its longitudinal tensile strength.

PVC, like many polymers, consists of long, randomly entangled molecular chains. Standard PVC is isotropic, meaning its mechanical properties are the same in all directions. However, when PVC undergoes biaxial stretching—a process where the pipe is stretched in both hoop and longitudinal directions—the molecular chains align preferentially in these directions.

This alignment greatly enhances the material's strength in both directions, which are critical for pipes under internal pressure.

The degree of strength increase is directly related to the amount of stretching. Biaxial stretching allows for higher design stresses compared to other plastic pipes.

The stretching is performed at specific processing temperatures, ensuring that the molecular orientation and increased strength are permanently locked in place.

Key benefits of biaxial orientation include:

- **Enhanced strength and toughness:** The biaxial orientation creates a laminar structure that significantly boosts the pipe's strength, toughness, and fatigue resistance.
- **Smooth pipe bore:** The finishing process during stretching results in an exceptionally smooth pipe bore, enhancing flow efficiency.
- **Greater flow capacity:** The increased strength and ductility permit the use of higher design stresses, allowing for a larger bore. This larger bore reduces pumping costs and increases flow capacity compared to equivalent PVC-U or PVC-M pipes.

The overall performance enhancements and cost efficiencies of biaxially oriented PVC pipes are summarized in Table 5.1.



Iplex Apollo Blue PVC-O DN 250 Series 2 PN16

Table 5.1 - Features and benefits of Apollo PVC-O

Features	Benefits
A full range of Series 2 diameters	Outside diameters are compatible with the majority of installed water mains such as AC, CI, DI, GRP.
Increased internal diameter and smooth bore	Lower flow resistances compared with traditional pipe systems giving the possibility of lower pumping costs.
Increased pipe stiffness	Pipe stiffness has been optimised to withstand both diametral and axial loadings together with internal vacuum and full field service tapping capability.
Toughness and ductility	Resists accidental impact during handling and installation.
Resistance to crack propagation	Provides extended fatigue resistance.
Internal and external resistance to corrosion.	No corrosion protection, such as poly sleeving is required.
A factory fitted, EPDM jointing gasket with a blue coloured polypropylene-retaining ring	Eliminates potential installation errors due to insertion of the wrong ring and requires minimal jointing force when making the joint.
Light weight	Reduced weight for easier handling and installation.



PVC-O Apollo Series 2 Pipe.

5.2 Material properties

The general physical properties of Apollo Blue™ Premium are given in Table 5.2.

Table 5.2 - Physical properties Apollo PVC-O

Property	Value
Physical and mechanical	
Specific gravity	1.42
PVC resin minimum K value (ISO 1628-2)	64
Effect on drinking water - AS/NZS 4020	Complies
Overall service (design) coefficient 'C'	1.6
Pipe class 'PN'	12.5 or 16
Material type (AS/NZS 4441)	355 or 450
Standard dimension ratio 'SDR'	37.0
Hydrostatic design stress 'os' - AS/NZS 4762.5	22 or 28 MPa
Minimum required strength 'MRS' at 20°C extrapolated to 50 years representing the 97.5% lower predicted limit	35.5 or 45 MPa
Flexural modulus -Calculated from the ring stiffness determined in accordance with ISO 9969	4200 MPa
Flexural ring modulus (2 year)	1700 MPa
Apparent modulus (50 year)	1400 MPa
Creep ratio, 2 year (refer ISO 9967 test)	2.4
Poisson's ratio	0.5
Thermal	
Coefficient of linear thermal expansion	7×10^{-6} /°C
Thermal conductivity	0.138 - 0.150 W/m.K
Specific heat	1045 J/kg.K
Maximum practicable working temperature	50°C
Fire resistance	
Flammability	Will not support combustion
Ignitability - AS 1530*	7
Smoke development - AS 1530*	9
Spread of flame - AS 1530*	0
Heat evolved - AS 1530*	2
* AWTA test report number 7-558803-CV	
Electrical	
Volume resistivity	1016 ohm.cm (60% RH)
Surface resistivity	1013 - 1014 ohm
Power factor	0.015 - 0.020 at 20°c
Dielectric constant	3.4 - 3.6 at 25°C (60 Hz)

5.3 Standards and testing

Apollo PVC-O pipes and their associated materials are produced in line with relevant Australian Standards and are overseen by third-party accredited quality assurance programs that comply with AS/NZS ISO 9001.

These pipes are manufactured to the requirements of *AS/NZS 4441 Oriented PVC (PVC-O) Pipe for Pressure Applications.*

They are third-party certified as conforming to AS/NZS 4441, holding both StandardsMark and WaterMark licences, making them suitable for plumbing applications as per AS/NZS 3500.

Apollo PVC-O pipes are supplied with a factory fitted rubber ring that locks the ring into place. The seal rings conform to AS/NZS 4020.

These seal rings can also be installed in the field if necessary, for example if damaged.

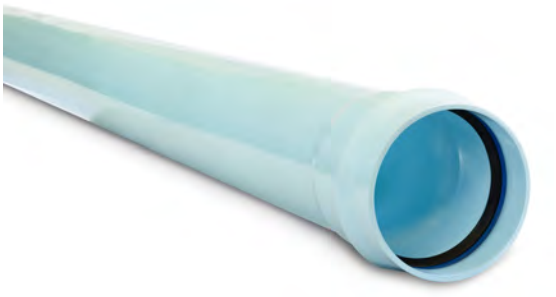

Apollo Blue pipes with factory-fitted composite seal ring.

5.4 Certificates

Iplex PVC-M pipes are Standards Mark licensed to AS/NZS 4441.

SAI Global licence numbers,

SMKP20188 WMKA20188

Australian Standard and Watermark Licence

5.5 Colour and marking

Iplex Apollo PVC-O pipes are colour-coded according to AS/NZS 4441 and WSAA product specification WSA PS 209 to distinguish between various applications.

The colours used are:

- **Apollo Blue (Series 2):** For drinking water applications, coloured blue.
- **Apollo Lilac (Series 2):** For recycled water applications, coloured purple/lilac.
- **Apollo Cream (Series 2):** For pressure sewer applications, coloured cream.

Markings on the pipes include:

- Manufacturer's name and brand name
- Nominal Pipe Size – DN150
- PVC-O pressure pipe
- PN16
- SDR
- Minimum wall thickness
- Date of manufacture
- Time of manufacture
- Manufacturer's code
- AS/NZS 4441
- Product certification licence
- Iplex Pipeline Premium BEP PVC

Markings are repeated at defined intervals along the length of the pipe, allowing for easier identification and meet the traceability requirements of AS/NZS 4441.



The structural stiffness of Iplex Apollo PVC-O pipe can allow installation under sealed roadways for urban pressure pipelines.



The relatively light weight nature of Iplex Apollo PVC-O pipes can allow ease of handling during installation.

5.6 PVC-O product coding

Table 5.3 - Product coding Apollo PVC-O

Product	Code	PN	Code	DN	Code	Effective length (m)	Code
Apollo Blue - RRJ	PDRA	12.5	12	100	100	3.0	C
	PDRA	12.5	12	150	150	3.0	C
Apollo Purple - RRJ	PDRAL	16	16	150	150	6.0	-
	PDRAL	16	16	225	225	6.0	-
Apollo Cream - RRJ	PDRAC	16	16	250	250	6.0	-
	PDRAC	16	16	300	300	6.0	-

5.7 Product dimension

Table 5.4 - Apollo Blue premium pipe dimensions

Nominal diameter DN	Nominal outside diameter mm	Nominal thickness mm	Nominal internal diameter ID	Witness mark length	Chamfer length (10-15° angle)
100	121.7	3.4	114.9	146.0	6.0
150	177.1	4.9	167.9	165.0	9.0
200	231.9	6.4	219.1	186.0	12.0
225	258.9	7.1	244.7	200.0	13.0
250	285.8	7.9	270.0	208.0	14.0
300	344.9	9.5	325.9	218.0	17.0



Iplex Apollo Blue PVC-O DN450 Series 2.

5.8 PVC-O flow capacity

The capacity of a pipeline can vary due to various factors, which include:

- Growth of slime which will vary with age of the pipeline and available nutrient in the water.
- Roughening, due to the wear by abrasive solids
- Siltation or settlement of suspended particulate matter.
- Joint imperfections/fitting types and configurations.

To assist the designer in selecting the appropriate diameter a flow resistance chart covering both PN12.5 and PN16 pressure classes has been provided in Figure 5.2. The flow resistance chart related friction loss to discharge and velocity for pipes running full and has been calculated using the Colebrook-White transition equation in the form:

$$V = -2\sqrt{2gdS}\,\log\left(\frac{k}{3.7d} + \frac{2.5lv}{d\sqrt{2gdS}}\right)$$

where:

V = mean velocity (m/s)

g = acceleration due to gravity (m/s^2)

d = pipe internal diameter (m)

S = hydraulic gradient (m/m)

k = equivalent hydraulic roughness (m)

v = kinematic viscosity (m^2/s)

The Colebrook White Transition Equation takes into account the variations of viscosity with temperature and pipe roughness and is recognised as being the most accurate in general use, but requires iterative solutions.

The flow resistance chart in Figure 5.2 has been prepared based on a temperature of 20°C which corresponds to a kinematic viscosity of water υ = 1.01 x 10-6m2/s and equivalent pipe wall roughness coefficient k=0.003mm.

This value of the equivalent roughness coefficient "k" assumes the Apollo Blue pipeline is straight, clean and concentrically jointed without fittings. Possible values ranging between 0.003 to 0.015 mm are given in AS 2200 "Design Charts for Water Supply and Sewerage" for PVC. An approximate allowance for the effect of variation in water temperature can be made by increasing the chart value of the head loss by 1% for each 3°C below 20° and by decreasing it by 1% for each 3°C in excess of 20°.

The hydraulic performance of a pipeline may be adversely affected if combined air release and anti-vacuum valves are not installed at local high points in each section of a pipeline, with a maximum spacing not exceeding 0.5 kilometres. These are required to maintain full bore flow and limit the occurrence of sub atmospheric conditions.

Pipe flow calculation software is available on the Iplex web site www.pocketengineer.com.au.

5.9 PVC-O pressure class selection

The *nominal* pressure rating of Apollo Blue pressure pipe is 1600 kPa. This rated pressure should not be exceeded at any location in the pipeline by the maximum operating pressure including water hammer pressure surcharges. Where the pipeline will be operating at elevated temperatures, that is higher than 20 0 C, the nominal rating should be multiplied by the re-rating factor for that temperature as provided in Table 2.1.

Fatigue and structural considerations should also be considered when selecting pipe class. For example surge pressures commonly known as "water hammer" must be consider when selecting pipe class (see Figure 5.1 for typical hydraulic grades and surge envelopes).

Apollo Blue pipes are manufactured with a minimum pipe stiffness of 10,000 N/m.m, which is greater than the recommended minimum for use under full vacuum conditions in a pipeline without external soil support. The factor of safety for buried pipelines, fully embedded in a properly compacted non-cohesive material (such as sand or gravel) will therefore be even greater.

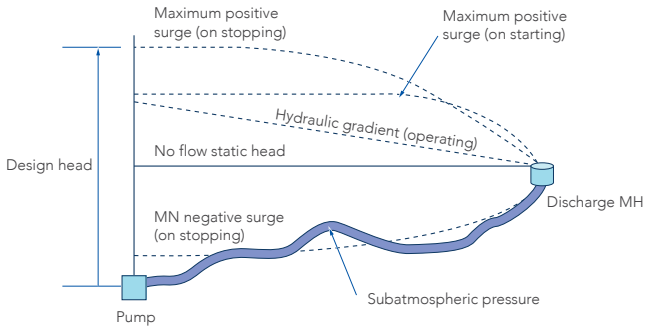

Figure 5.1 – Typical hydraulic grades and surge envelopes required for design.

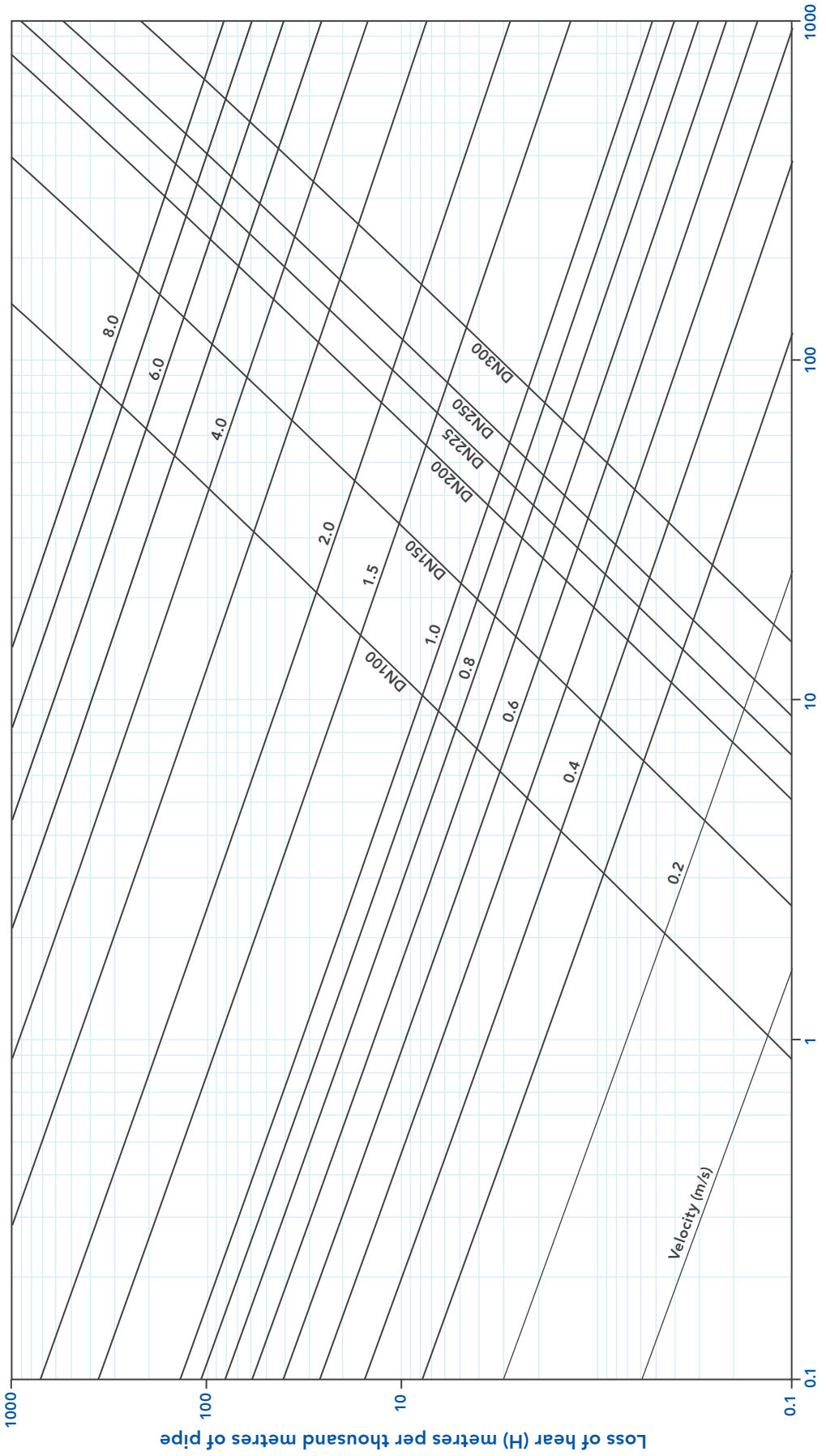

Figure 5.2 - Flow resistance chart - Apollo PVC-O (Series 2)

Note:
This chart has been prepared using the Colebrook White Formula with a roughness co-efficient k=-0.003mm.
This chart has been calculated for the viscosity of water at 20°C.

5.10 PVC-O water hammer surges and cyclical effects

Water hammer effects in thermoplastic materials are considerably reduced compared with iron steel and concrete due to the much lower modulus of elasticity.

Apollo Blue has characteristics with respect to fatigue under cyclical pressures. To eliminate risk of fatigue failure the designer should take into account the frequency of pressure fluctuations during the expected service life of the pipeline. This can be achieved by ensuring that the amplitude of the surge (ie. The difference between the maximum and minimum steady state operating pressures including persistent water hammer effects, when divided by the load factor given in Table 5.5 should not exceed the nominal pressure rating of the pipe.

In practice the pressure changes in water reticulation systems are seldom of sufficient amplitude and frequency for fatigue to affect pipe class selection, but they can be an important consideration for sewer rising mains. For practical purposes the pressure range will be the difference in the hydraulic gradients for when the pump is running and when stopped.

The frequency is defined as the number of combined pump start and stop cycles. If an allowance is considered necessary to allow for attenuation of water hammer oscillations the frequency can then be taken as being twice the number of start/ stop cycles. (It can be shown mathematically that this is appropriate for the exponential decay typical of pressure surge oscillations).

The dynamic fatigue consideration requires a pipe to be selected with a pressure rating which, when multiplied by the fatigue factor, will give a value greater than the pressure range.

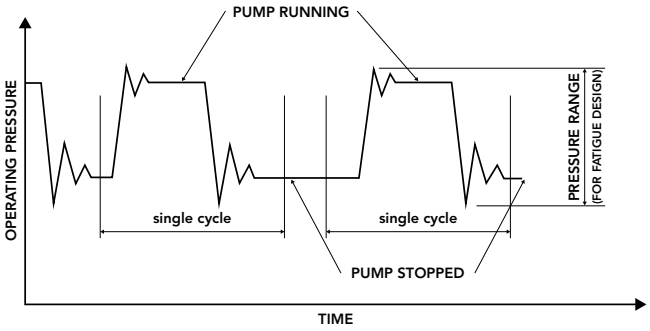

Figure 5.3 - Inputs for fatigue design- pressure range ('amplitude'1 and frequency.

Apollo Blue PN16 has a pressure rating of 160 metres. If a pipeline is proposed which is estimated to be subject to approximately 2.5 million cycles over its entire service life, Table 5.5 gives a fatigue load factor of 0.41. Therefore an Apollo Blue PN16 pipeline is suitable for a fluctuating pressure range of up to 160 x 0.41 = 65.6 metres (Alternatively Figure 5.4 could be used to directly determine the appropriate class.)

Table 5.5 - Fatigue load factors for different PVC materials

Total number of cycles over 100 years	Approximate number of cycles / days for 100 year life	PVC-U	PVC-M	Apollo Blue PVC-O
26400	1	1.00	1.00	1.00
100000	3	1.00	0.67	0.75
200000	5.5	0.81	0.54	0.66
500000	14	0.62	0.41	0.56
1000000	27	0.50	0.33	0.49
2500000	82	0.38	0.25	0.41
5000000	137	0.38	0.25	0.41
10000000	274	0.38	0.25	0.41

Reference: PIPA Industry Guidelines "PVC Pressure Pipes, Design for Dynamic Stresses" Issue 1.2 POP101.

Figure 5.4 - Fatigue loading chart

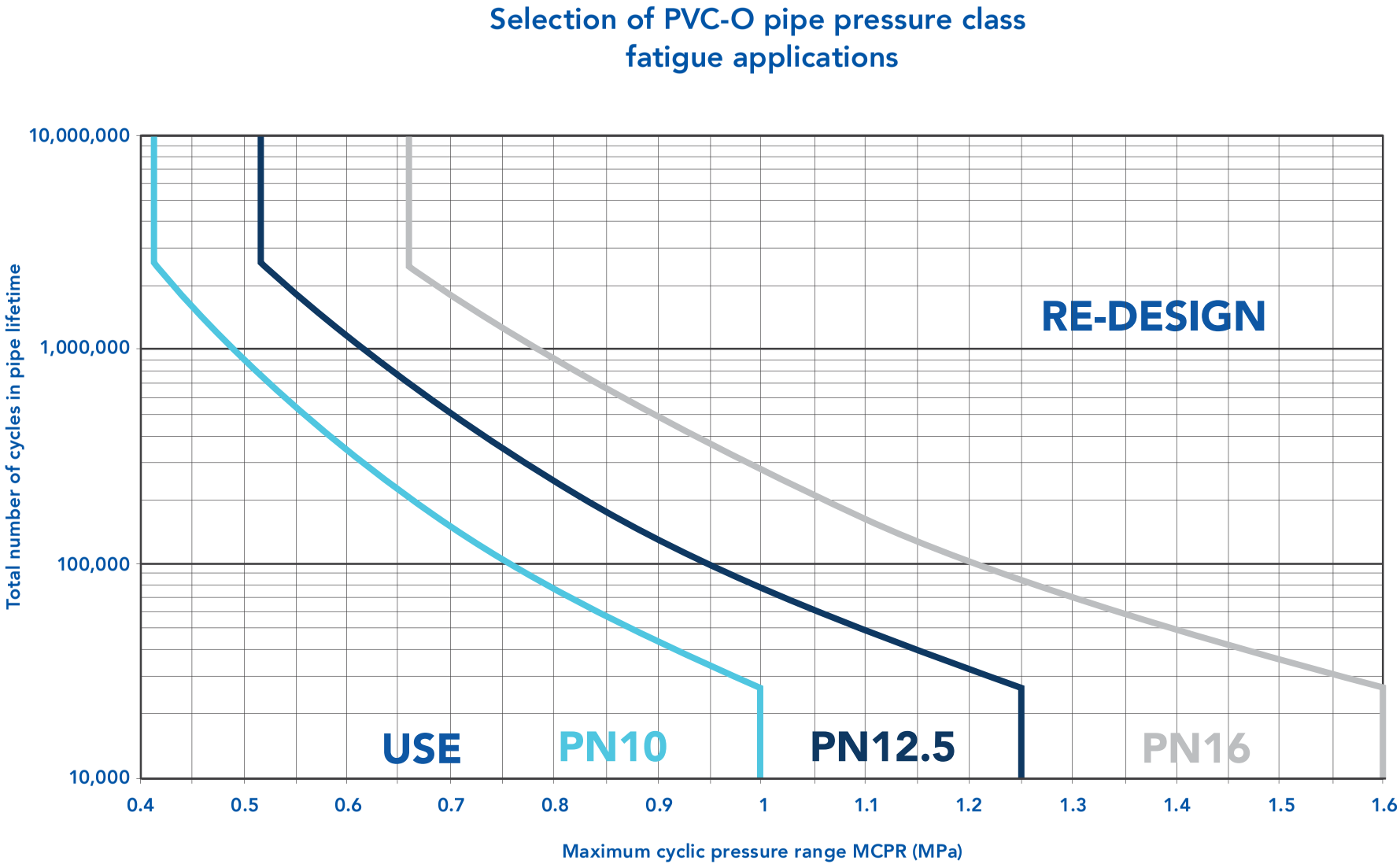

6.0 Storage and handling

6.1 Handling

PVC pipes is normally delivered in timber packs designed to hold the pipes in position and protect it from point loading and ovalisation.

Whilst PVC pipes is easy to handle, careless handling can cause unnecessary damage to the pipe. Pipes and fittings must not be dropped or thrown onto hard surfaces or allowed to come into contact with hard sharp objects that could inflict scratches.

Handle pipes with care to avoid damage, especially to joints and the spigot and socket areas. Use proper equipment and follow safety protocols to prevent injury. Avoid using wire slings to lift pipes.

Handling of block bundles

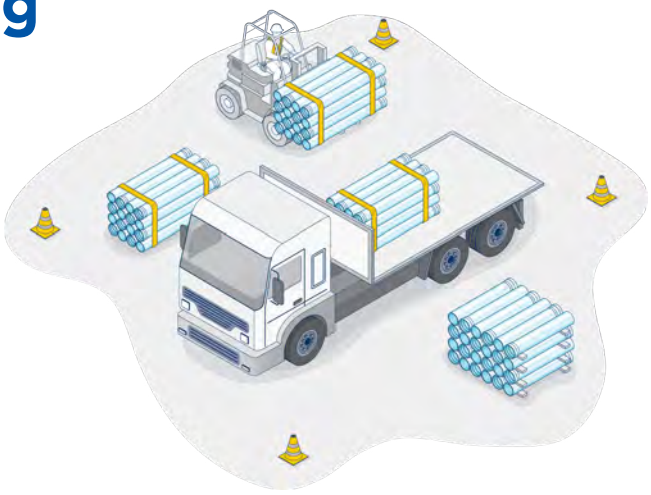

6.2 Storage

PVC pipes must be left in their packed units wherever possible until they are required to be installed.

If pipes and fittings are stored outdoors for more than 24 months, protection from sunlight is required using a breathable material (i.e. hessian or white shade cloth) to prevent heat build-up and allow for ventilation. Pipes may be stacked on site provided the ground surface is level and free from loose stones and other sharp objects. Socketed pipes must be stacked with alternate layers of sockets facing in opposite directions to prevent load bearing.

Racks for long term storage are recommended and should preferably provide continuous support, however if this is not possible, supports of at least 75mm bearing width at 1m maximum centres should be placed beneath the pipes. Side restraints should be placed at centres not exceeding 1.5m and stacks must not exceed 1m in height.

When unloading alongside excavated trenches, pipes should be placed on the opposite side of the trench from excavated material if it is safe to do so. Rubber rings and silicone spray must be stored under cover until pipe laying commences.

Loose pipes on bearers

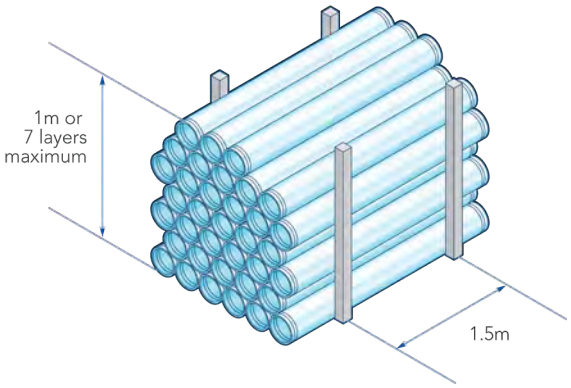

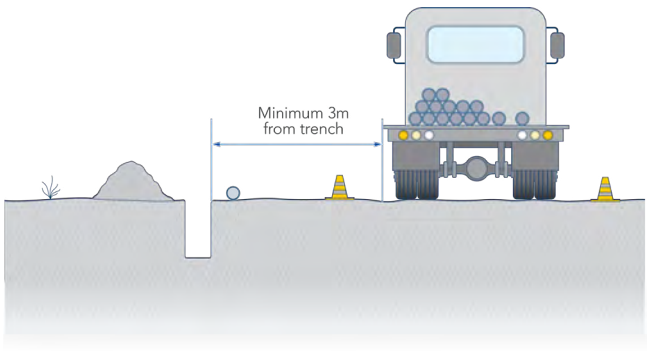

6.3 Cleaning

Water jet cleaning of pipeline internal surfaces may be required during the pipeline commissioning process and is commonly applied in the case of pipeline maintenance. Water jet cleaning of plastic pipes must be carried out in accordance with the guidance given in *PIPA POP205 – Water Jet Cleaning of Plastics Pipes.* In the case of PVC pipes, the maximum pressure at the jetting nozzle must not exceed 12,000 kPA, and the maximum time that the nozzle remains stationary in the pipeline during jetting must not exceed 60 seconds. Further details regarding acceptable nozzle types, configurations, nozzle speed, and calculation of pump gauge pressure for varying flowrates is given in POP205.

7.0 Lubricants for rubber ring joints

7.1 Iplex rubber ring lubricant

Iplex provide 2 types of lubricants listed in Table 7.1.

The Iplex lubricants are suitable for pressure and non-pressure applications.

For application where the transferred media is not intended for human consumption, a bactericidal lubricant is not necessary.

Mineral based greases must not be used.

Table 7.1 - Product codes for lubricant

Product codes			
Iplex standard lubricant	**Iplex Plus* (bactericidal)**	**Container size (grams)**	**Weight ea (kg)**
JLO10500	JLB10500	500	0.5
JLO11000	JLB11000	1000	1
JLO14000	JLB14000	4000	4

Note: *this product is accredited under the WaterMark Scheme to technical specification WMTS 014:2016, Certificate number WMKA00103

7.2 Solvent cement and primer

Iplex premium solvent cements and benzene free priming fluids are manufactured to AS/NZS 3879.

Solvent cements and priming fluids for PVC (PVC-U and PVC-M) and ABS pipe and fittings.

Select the correct solvent cement for the application as follows:

- Type N - For tapered interference fit joints designed for non-pressure applications.
- Type P – For tapered interference fit joints designed for pressure applications.
- Type G – For parallel low interference joints designed for pressure and non-pressure applications.

Table 7.2 - Solvent cement

Product codes	Colour	Container size (grams)	Weight ea (kg)
JPG0125	Green	125	0.125
JPG0250	Green	250	0.25
JPG0500	Green	500	0.5
JPG04000	Green	4000	4
JPC0500	Clear	500	0.5
JPC1000LB	Clear	1000	1

Table 7.3 - Priming fluid

Product codes	Colour	Container size (mL)	Weight ea (kg)
JR0250	Red	250	0.25
JR0500	Red	500	0.5
JR1000	Red	1000	0.1
JR4000	Red	4000	4
JC0250	Clear	250	0.25
JC0500	Clear	500	0.5

8.0 Design considerations

8.1 Flexible pipe design

The Iplex range of PVC pressure pipes are considered to be "flexible" pipes, which means that when buried they are designed to deform or deflect diametrically within specified limits without structural damage.

The external soil and live loadings above flexible pipes may cause a decrease in the vertical diameter and an increase in the horizontal diameter of the pipe. The horizontal movement of the pipe walls in the soil material at the sides develops a passive resistance within the soil to support the external load. That is, the pipeline performance is influenced by the soil type, density and height of water table. The higher the effective soil modulus at pipe depth, the less the pipe will deflect.

Initial deflections of up to 3% are permissible and will not affect the pressure rating of the pipe. Consult Iplex for further details or refer to *AS/NZS 2566.1 Buried Flexible Pipelines Part 1 Structural Design.*

Further information can be found at www.pocketengineer.com.au

8.2 Minimum cover heights – AS/NZS 2566

For areas with no traffic loading, a minimum cover height of 450mm to the top of the pipe should be adopted. Under sealed roadways the minimum cover height is 600mm and 750mm for unsealed roadways.

Pipe embedment material must have a minimum Compaction Density Index of 65% or Standard Dry Density Compaction of 90%. After pipes are laid and centred in trench, the embedment material must be compacted in 80-100mm layers to the specified density. The embedment must continue 80mm to 150mm above the pipe to provide protection from the backfill.

8.3 Thrust block design for fittings

For rubber ring jointed pipeline systems, provision must be made for potentially unrestrained forces at changes of size or direction. For example bends, tees, reducers, valves and closed ends.

In buried installations, fittings are usually restrained by concrete cast in situ. These thrust blocks are formed and sized to distribute the applied force from the fitting to a safe soil pressure at the soil / concrete interface. The resistance which can be provided will depend on the soil type and depth.

Where bends are in the vertical plane, convex and close to the surface, the mass of concrete anchor block alone may have to be the restraining force.

AS/NZS 2566.2 and AS 2032 require the use of thrust blocks for all in-line gate valves.

Where there is a risk of axial thrust,only those DI fittings with full circle bearing surfaces at the base of the socket should be used.

Refer to Figure 8.1 for typical thrust block arrangements for bends and tees, as per AS/NZS 2566.

Refer to Figure 8.1 for typical thrust block arrangements for bends and tees, as per AS/NZS 2566.

Use Table 8.1 for hydrostatic thrust forces on fittings and Table 8.2 for soil bearing capacities when sizing thrust blocks.

Figure 8.1 - Typical thrust block arrangements (reference AS/NZS 2566)

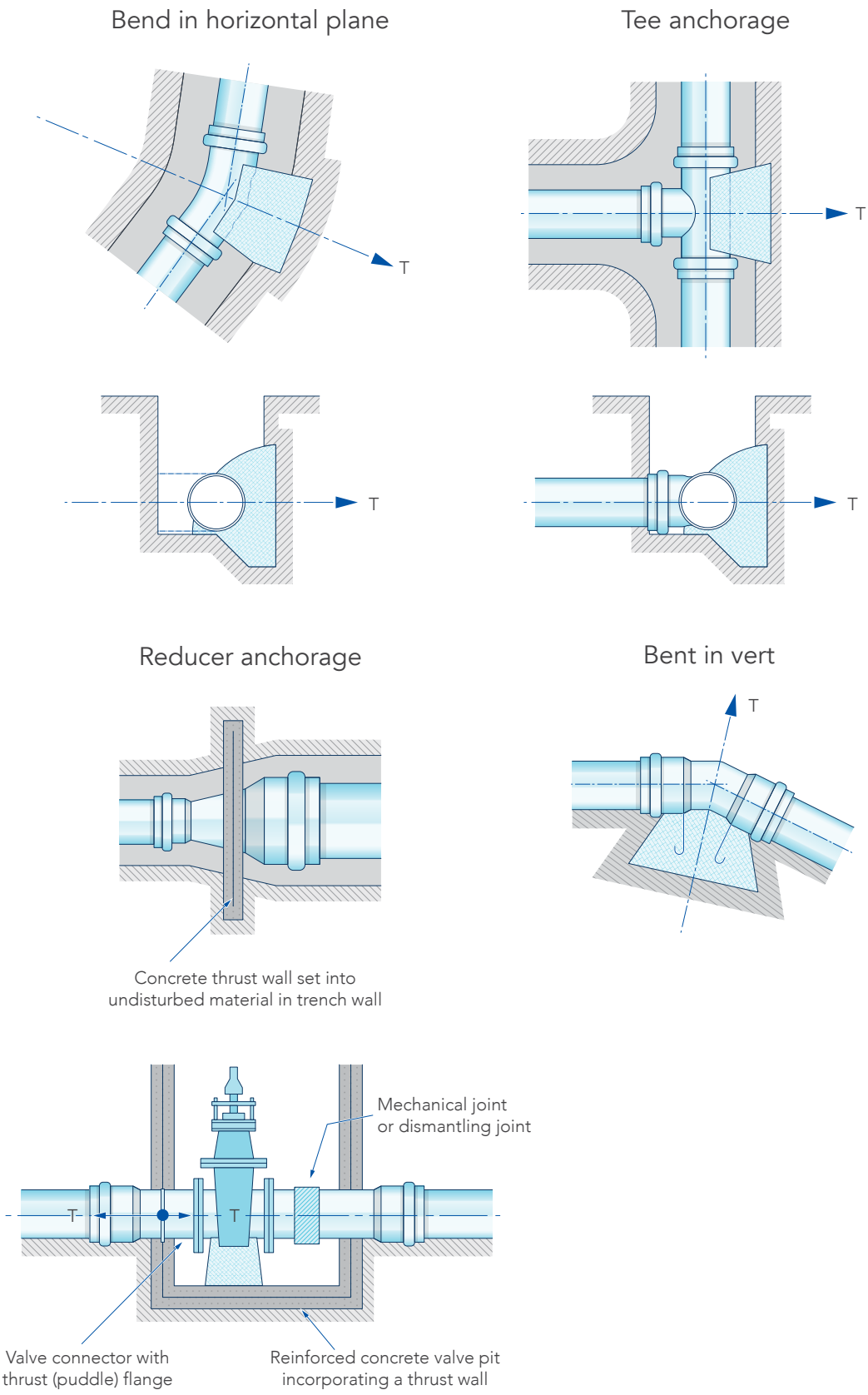

Table 8.1 Hydrostatic forces in kilonewtons on rubber ring jointed fittings per ten (10) metres hydrostatic head

Pipe DN	Pipe OD	Bend 90°	Bend 45°	Bend 22.5°	Bend 11.25°	Tee/ closed end/ valve
100	122	1.62	0.88	0.45	0.22	1.15
150	177	3.41	1.85	0.94	0.47	2.41
200	232	5.86	3.18	1.61	0.81	4.14
225	259	7.31	3.96	2.01	1.01	5.17
250	286	8.91	4.83	2.45	1.23	6.30
300	345	12.96	7.02	3.57	1.79	9.16

Note: For concentric reducers the resultant thrust will be the difference between the "closed end" forces for the two pipe sizes.

Table 8.2 Soil bearing capacities in kPa

Soil group description as per AS 1786	Minimum soil cover above centre line of thrust block in metres			
	0.75	1.0	1.25	1.5
GW,SW	57	76	95	114
GP,SP	48	64	80	97
GM,SM	48	64	80	96
GC,SC	79	92	105	119
CL	74	85	95	106
ML	69	81	93	106
OH	0	0	0	0

Thrust blocks must be configured to distribute the hydrostatic force to a "wall" of undisturbed soil which is approximately perpendicular to the imposed load.

The equation for this calculation is :

A = T/ b x f

Where

A = area perpendicular to force (m^2)

T = hydrostatic thrust (kN)

b = soil bearing capacity (kPa)

f = factor of safety (in the order of 1.1 to 1.5)

Example:

Problem: A DN300 PVC-U pipeline has a maximum operating head (include field test heads) of 150 metres. What is the minimum area for a thrust block for a 90 degree ductile iron bend buried with 1 metre cover to centreline in a type SC soil

Solution: From Table 8.1 the hydrostatic thrust "T" is 12.96 kN x 15 = 194.4 kN.

From Table 8.2, "b" = 92 kPa.

Therefore:

A = 194.4 / (92 x 1.1) = 2.32 m^2

9.0 Installation

The installation and testing of buried flexible pipelines is detailed in *AS/NZS2032 Installation of PVC Pipe Systems* and *AS/NZS2566.2 Buried Flexible Pipelines - Installation*.

The installation of above ground PVC pipelines is also detailed in *AS/NZS2032 Installation of PVC Pipe Systems*.

9.1 Trenching

Trenches should be excavated in accordance with the plans and specifications and with reference to *AS/NZS2032 Installation of PVC Pipe Systems* or *AS/NZS2566.2 Buried Flexible Pipelines - Installation*, and must allow adequate space for compaction of the embedment material in the side support zone.

Trenches should be straight and as narrow as practicable at the top of the pipe. The minimum trench widths are specified in Table 9.1.

Table 9.1 Minimum trench dimensions

DN	h	B*	k
80	75	300	100
100	75	350	100
150	75	400	100
200	100	550	150
225	100	550	150
250	100	600	150
300	100	650	150
375	100	800	150

***Note the tabulated values may provide insufficient clearance for installation purposes in certain circumstances. This means that while the dimensions in Table 9.1 represent minimum trench widths, actual site conditions or installation requirements may require more space than these minimums.**

Figure 9.1 Embedment, clearance and cover dimensions

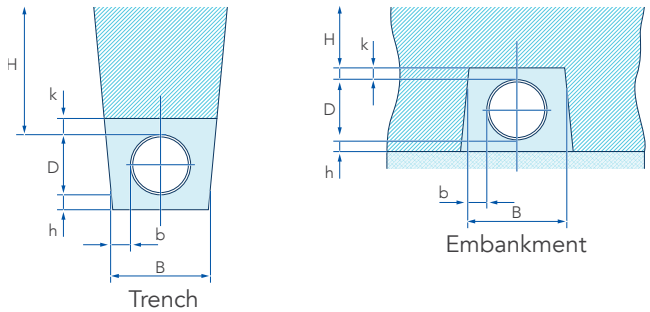

D – Pipe outside diameter
B – Minimum trench width at pipe level
b – Clearance between pipe and trench wall
h – Thickness of bedding layer beneath the pipe
H – Cover height from top of pipe to finished ground surface
k – Thickness of embedment overlay above the pipe

9.2 Embedment and backfilling

The quality of the embedment material and its compaction, combined with the type and density of the native soil are all relevant to the ultimate performance of PVC pressure pipes once installed.

The trench bottom should be as smooth as possible and to grade. Embedment material used for bedding, side support, and overlay should generally consist of non-cohesive granular materials. PVC pressure pipes must not be buried in contact with soil particle sizes larger than 5% of diameter, with 20 mm as maximum.

Soil clods must be excluded from the pipe embedment zone and under no circumstances should temporary supports such as bricks or timber be left under or in contact with pipes. If the excavated material is not granular or friable, or does not comply with the project specification, then suitable embedment must be imported.

Jointing or "clearance holes" must be excavated in the bedding for pipe sockets to ensure the pipes are evenly supported along the full length. In the absence of any specification, and if the pipe classes are PN6 or PN9, it is important that only non-cohesive or granular embedment be used. Careful attention must be given to placing and compacting the embedment material to the specified relative compaction, ensuring it is free of voids.

Mechanical joints, especially flanged joints, should be left exposed if possible until the line is tested. Pipes must not be left uncovered. The possibility of pipe floatation in the event of rain and water in the trench will occur unless it is backfilled to a height of at least one and half diameters above the pipe.

The method of placing the remainder of the trench backfill will depend on whether the pipeline is located in an area with no traffic loading or under a roadway. In a roadway it is normal practice to continue backfilling and compacting with good quality embedment material up to pavement level. Heavy compaction of backfill must not commence without at least 300mm of material covering the pipeline.

9.3 Cleaning

Water jet cleaning of pipeline internal surfaces may be required during the pipeline commissioning process and is commonly applied in the case of pipeline maintenance. Water jet cleaning of plastic pipes must be carried out in accordance with the guidance given in *PIPA POP205 – Water Jet Cleaning of Plastics Pipes*. In the case of PVC pipes, the maximum pressure at the jetting nozzle must not exceed 12,000 kPA, and the maximum time that the nozzle remains stationary in the pipeline during jetting must not exceed 60 seconds. Further details regarding acceptable nozzle types, configurations, nozzle speed, and calculation of pump gauge pressure for varying flowrates is given in POP205.

10.0 Jointing methods

PVC pipes are easy to assemble using one of two types of jointing methods, Rubber Ring Joints (RRJ) and Solvent Weld Joints (SWJ).

The pipe size and application dictate which jointing method is available.

While Iplex rubber ring jointed pipes can be fully assembled above the trench, care must be taken to ensure joints do not pull apart during lowering into the trench and all joints must subsequently be inspected. Solvent welded pipe may be fully jointed above the trench but not lowered into the trench until the solvent has taken its initial set.

10.2 Solvent weld joint

Iplex solvent cements and benzene free priming fluids are manufactured to AS/NZS 3879. Solvent cements and priming fluids are available for PVC (PVC-U, PVC-M and PVC-O) pipes and fittings.

To achieve strong leak free joints installers should:

1) Select the correct solvent cement for the application

- Type P – For tapered interference fit joints designed for pressure applications.
- Type G – For parallel low interference joints designed for pressure and non-pressure applications.

2) Select the correct pipe and fitting.

3) Follow jointing steps 1 - 8 carefully in jointing instructions set out in Section 10.2.7. Short cuts will result in poor joints that are likely to cause system failure.

10.2.1 How solvent cement works

Iplex solvent is a solution of resin in a mixture of solvents, which softens the surfaces when applied to PVC pipe and fittings. It is not a glue.

A thin uniform coat is applied to both the spigot and socket and the joint is assembled while the surfaces are still wet and fluid. The cement layers intermingle and become one. The strength of the joint develops as the solvent permeates the PVC and the volatile constituents evaporate.

10.2.2 The importance of Iplex priming fluids

Before applying the solvent cement, it is essential to use Iplex Priming Fluid for successful jointing as the fluid not only cleans and degreases but removes the glazed surface from PVC which allows the solvent cement to permeate into the wall of the pipe or fitting.

It must be applied with a clean, lint free cotton cloth. Brushing the priming fluid on or simply pouring the fluid over the pipes and fittings does not remove grease and dirt.

10.2.3 Tools required

- Appropriate PPE including but not limited to gloves, safety shoes, safety glasses, dust mask.
- Saw to cut pipe either hand or electric.
- Mitre Box.
- De-burring tool or sharp edge or file to remove swarf.
- Lint free cloths, non-synthetic.
- Solvent Cement and Primer (usage chart can be found below).
- Tape measure .
- Pencil.

10.2.4 Iplex solvent cement

Select the correct type of solvent cement for your application and fit design.

Table 10.1 - Solvent cement (type P)

Product codes	Colour	Container size (mL)	Weight ea (kg)
JPG0125	Green	125	0.125
JPG0250	Green	250	0.25
JPG0500	Green	500	0.5
JPG04000	Green	4000	4
JPC0500	Clear	500	0.5
JPC1000LB	Clear	1000	1

Table 10.2 - Priming fluid

Product codes	Colour	Container size (mL)	Weight ea (kg)
JR0250	Red	250	0.25
JR0500	Red	500	0.5
JR1000	Red	1000	0.1
JR4000	Red	4000	4
JC0250	Clear	250	0.25
JC0500	Clear	500	0.5

Usage guide

Average number of joints per litre of Iplex solvent (estimate only)

Nominal pipe size (DN)	Approx. joints per litre
15	600
20	350
25	260
32	190
40	140
50	84
65	70
80	60
100	50
110	40
125	35
140	30
150	30
200	20

Average number of joints per litre of Iplex primer (estimate only):

Nominal pipe size (DN)	Approx. joints per litre
15	2100
20	1250
25	900
32	650
40	500
50	300
65	250
80	200
100	140
125	110
150	90
200	65

10.2.5 Storage of solvent cement and primer

- Solvent cement and priming fluids are highly flammable. In the event of fire, smother with a fire blanket or earth or use suitable fire extinguisher.
- Store solvent cements and priming fluid in a cool place away from heat, flames and sparks.
- Ensure can lids are tightly closed when not in use.
- Use solvent cements within twelve months of the date stamped on the bottom of the bottle/can. If the solvent cement has become so thick that it does not flow easily, discard.
- Do not add any other ingredients or solvents to these products.

10.2.6 Safety precautions

- Do not use solvent cements or priming fluid in confined spaces without adequate ventilation, or near open flames or sparks.
- Do not smoke while using these products.
- If spilt on skin, immediately wash off with soap and water.
- Keep container sealed when not in use.

If swallowed, do not induce vomiting. Call Poisons Information Centre or a Doctor immediately. Avoid contact with eyes. If contact occurs flush with copious amounts of water.

10.2.7 Jointing instructions

Installers must adhere to the PIPA Industry Guideline POP102 – Solvent Cement Jointing of PVC Pipe. A summary is provided below to assist, however the full guideline should be followed.

Do not work with hot pipes or on hot windy days without protecting pipes from the wind.

Keep lid on solvent cement to minimise evaporation. Do not use solvent or primer that is over 12 months old from the date stamped on bottom of bottle/can.

Step 1 - Cut spigot square and deburr

Cut the spigot square using a mitre box and hacksaw or power saw. Do not use a cutting disk that will melt the pipe as it will release potentially harm gas.

Remove all swarf and burrs from both inside and outside edges with a knife, file, reamer or sandpaper. Swarf and burrs if left, will wipe off the solvent cement and prevent proper jointing. Swarf inside pipes can catch and hold water born materials causing blockages or become dislodged and jam taps and valves. Do not roughen surfaces to be glued.

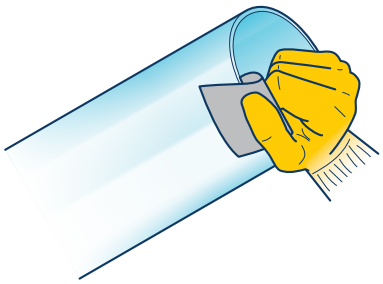

Step 2 - Check alignment

Check the pipe and spigot or fittings for proper alignment and placement.

The time for any adjustments is now, not later.

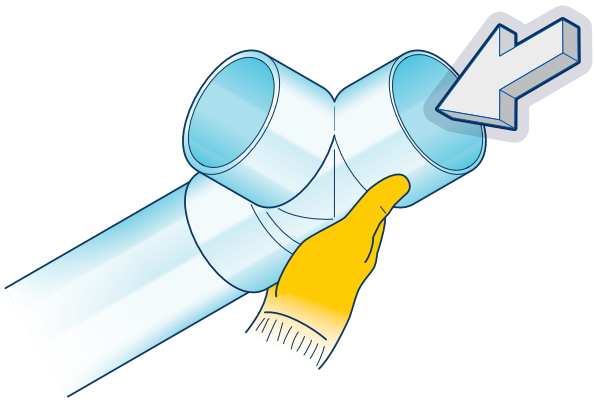

Step 3 - Mark clearly

Mark the spigot with a pencil or marker at a distance equal to the internal depth of the socket. Only use pencil or a marker. Do not score or damage the surface of the pipe or fitting.



Step 4 - Clean the surfaces to be glued

Thoroughly clean the inside of the socket and the area between the pencil mark and the spigot end with a clean, lint free cotton cloth dipped in priming fluid (do not use synthetic material). This removes dirt and grease and softens the PVC-U surface. Do not brush or pour the priming fluid on.

Use gloves. If contact with skin occurs, wash affected area with soap and copious quantities of water immediately.



Step 5 - Coat socket first - then spigot

Apply a thin, uniform coat of Iplex solvent cement to the socket. Take care to ensure that solvent build up does not occur in the root of the socket - a pool of cement there will severely weaken the pipe or fitting. Now apply a uniform coat of solvent cement to the external surface of the spigot up to the pencil mark.



Step 6 - Assemble-hold for 30 seconds

Assemble the joint quickly before the cement dries by pushing the spigot firmly into the socket as far as the pencil mark, apply a quarter turn during insertion to spread the cement evenly. Hold the joint in this position for at least thirty seconds without movement.

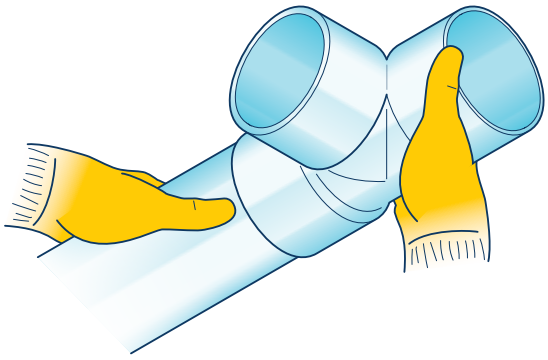

Step 7 - A vital 5 minutes

Gently wipe off the excess solvent cement from the outside of the joint and where possible from the inside of the joint. Do not disturb the joint for at least a further five minutes as movement may break the initial bond.



Step 8 - Curing and testing

The cure time is the time taken for the joint to achieve sufficient strength to allow it to be tested using the non-pressure test procedure specified in *AS/NZS 2032 Installation of PVC Pipe Systems*.

As a guide for pressure applications, at a temperature of 16°C and above, 24 hours should be allowed, at 0°C, 48 hours is necessary.

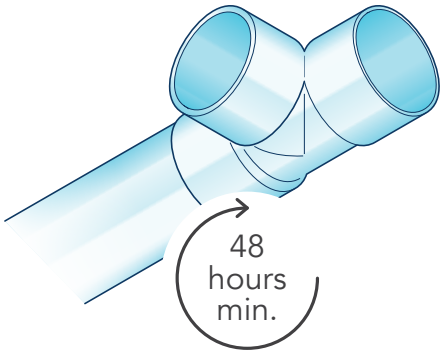

10.3 Iplex lubricant

Iplex provides two types of lubricant;

- The Iplex Standard lubricant suitable for non-drinking water applications.
- Iplex Plus (Bactericidal) to be used for drinking water applications.

Mineral based greases, must not be used.

Container size (grams)	Product codes	
	Iplex standard lubricant	Iplex Plus* (Bactericidal)
500	JLO10500	JLB10500
1,000	JLO11000	JLB11000
4,000	JLO14000	JLB14000

Note: *This product is accredited under the WaterMark Scheme to technical specification WMTS 014:2016, Certificate number WMKA00103

Average number of joints per litre of Iplex lubricant (estimate only):

Nominal pipe size (mm)	Approx. joints per litre
100	75
150	50
225	35
300	25
375	20

10.3.1 Storage of lubricants

- Store lubricant in a cool place away from heat, flames and sparks.
- Ensure can lids are tightly closed when not in use.
- Use lubricant within twelve months of the date stamped on the bottom of the bottle/can.
- Do not add any other ingredients or solvents to these products.

10.3.2 Safety precautions

- Do not smoke while using these products.
- If poisoning occurs, consult a doctor or Poisons information Centre.
- Keep container sealed when not in use.

If swallowed:

Iplex Standard Lubricant	Do not induce vomiting. Call Poisons Information Centre or a doctor immediately.
Iplex Plus* (Bactericidal)	Do not induce vomiting. Call Poisons Information Centre or a doctor immediately.

Avoid contact with eyes. If contact occurs flush with copious amounts of water.

10.4 Placing pipes into trenches

Iplex rubber ring joints can be joined outside the trench if required. However, it is recommended that rubber ring joints be made in the trench, particularly in pipelines of 150mm diameter and over, to avoid the possible necessity of re-positioning disturbed joints.

Particular care should be taken to ensure that no dirt or moisture has collected on the joint surface during handling.

When pipes are jointed outside the trench particular care must be paid to how they are lifted and that the minimum bend radius of the pipe is not exceeded.

10.5 Ring jointing instructions

Step 1 - Clean

Remove all dust and dirt from the pipe spigot and socket or coupling and exposed surfaces of the rubber ring. PVC-O, PVC-M and PVC-U pipes are supplied with a factory fitted rubber ring that locks the ring into place.

Step 2 - Apply lubricant

Apply lubricant to the pipe spigot, fully covering the circumference up to the witness mark, ensuring that the lubricant also covers the pipe chamfer.

Note: Keep the container of lubricant closed when not in use to avoid spillage or contamination by dust or dirt.

Step 3 - Insert pipe

With pipes in a straight line introduce the spigot into the socket and push home until the witness mark remains just visible. In this position, clearance is automatically provided to allow for expansion and contraction. A crowbar and wooden block can be used to apply extra force to carefully push the joint closed. The socket of the joint being made should be restrained to prevent backward movement which would close up joints already made.

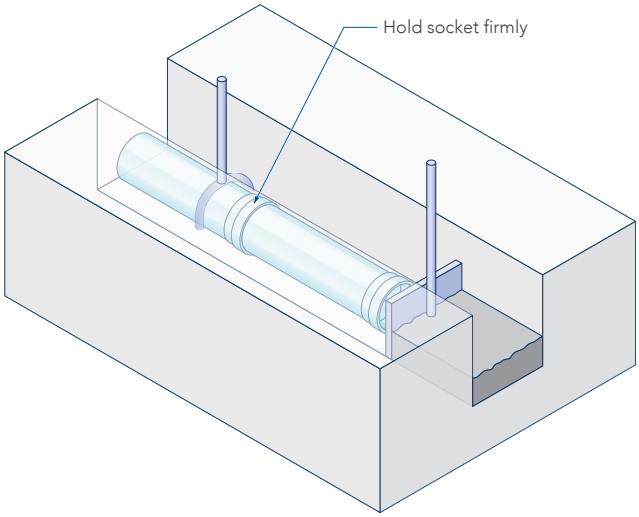

10.5.1 Tools required

- Appropriate PPE including but not limited to gloves, safety shoes, safety glasses, dusk mask.
- Saw to cut pipe either hand or electric.
- Mitre Box.
- De-burring tool or sharp edge or file to remove swarf.
- File to reform chamfer on the newly cut end.
- Cotton cloths.
- Appropriate Iplex lubricant (MINERAL BASED GREASES, MUST NOT BE USED).
- Tape measure.
- Pencil.

10.5.2 Cutting pipes if required

To cut pipes on site use a fine-toothed handsaw or electric saw. Do not use a cutting disk that will melt the pipe as it will release potentially harmful gas. The cut position should be measured to allow the penetration depth of the spigot into the socket shown in image in 10.5.3 below. A mitre box is recommended to ensure the cut is square to the pipe axis and all burrs removed with a file.

A chamfer similar to the factory produced chamfer on the pipes supplied is essential before attempting to join the pipes. The maximum length of chamfers applied on site must be no more than Dimension 'N' shown in the referenced tables. The witness mark should then be made, using a marker, at the required insertion length.

10.5.3 Chamfer and witness mark details

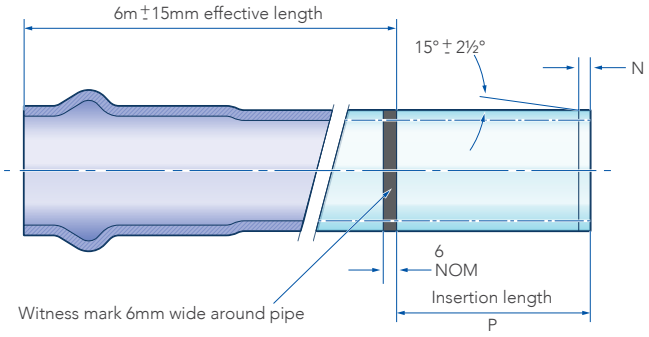

See Table 3.6 on page 10 for PVC-U Series 1

See Table 4.6 on page 20 for PVC-M (Rhino) Series 1

See Table 4.7 on page 21 for Series 2 PVC_M (Rhino)

See Table 5.4 on page 31 for PVC-O (Apollo) series 2

11.0 PVC-U Pressure fittings for solvent cement jointing

Iplex Series 1 PVC-U, PVC-M, pressure systems

11.1 Fittings

A full range of bends, tees, reducers, and valve connectors are available for Iplex PVC-U Series 1 pressure pipes with appropriate socketed joints. This range can also be successfully used with Series 1 dimension Iplex PVC-M.

11.2 PVC-U fittings

The Iplex solvent weld joint (SWJ) PVC pressure fitting range is compatible with Series 1 pipes and is available for pipe sizes DN15 to DN150.

Note: The use of imported solvent welded PVC-U fittings with parallel sockets will require gap filling solvent complying with AS/NZS 3879. Failure to use the appropriate solvent cement and cleaner will result in joint failure.

All PVC fittings are electrically non-conductive and do not require corrosion protection in aggressive environments.



Table 10.1 - P002 PVC pressure (valve) adaptor - spigot SWJ x MI BSP thread

Product code	DN x BSP	PN	OD	L1	L2	L3	Weight ea (kg)	Box qty
P0022525	25x1″	18	33	54	24	23	0.028	240
P0023232	32x1¼″	18	42	63	30	23	0.051	N/A
P0024020	40x¾″	18	48	56	33	16	0.046	N/A
P0024025	40x1″	18	48	59	33	19	0.051	N/A
P0024032	40x 1¼″	18	48	63	33	22	0.061	N/A
P0024040	40X1½″	18	48	67	33	23	0.069	N/A
P0025025	50x1″	18	60	63	37	19	0.081	N/A
P0025040	50X1½″	18	60	67	37	21	0.099	90
P0025050	50x2″	18	60	79	38	27	0.131	60
P0028075	80x3″	18	89	106	51	35	0.375	20
P002100100	100x4″	18	114	180	69	40	0.59	8

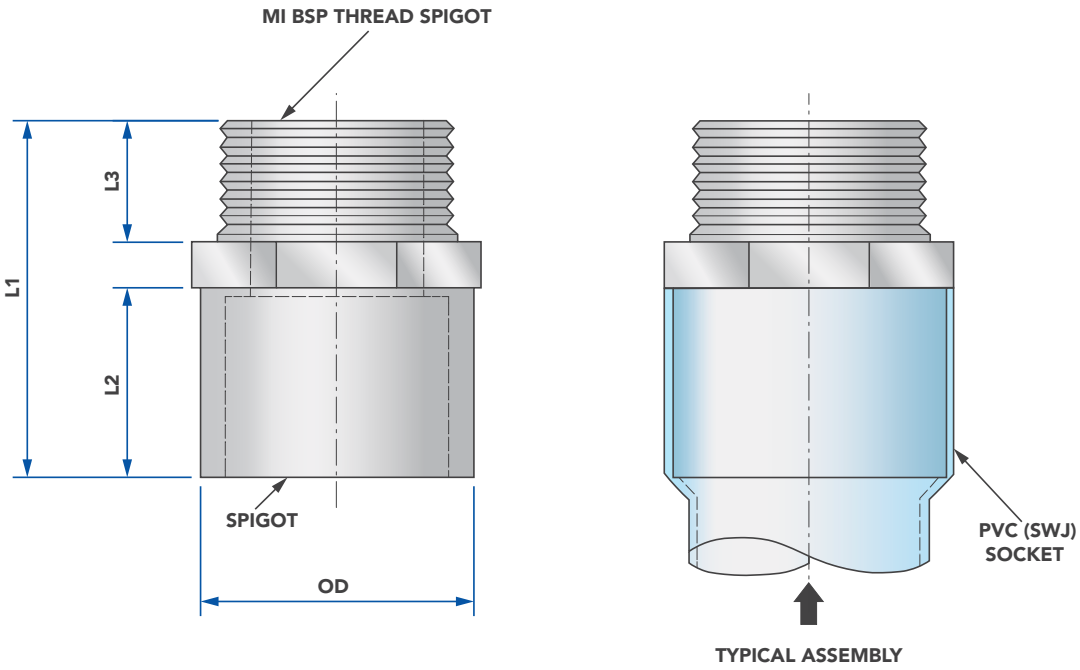

Table 10.2 - P003 PVC pressure (faucet) adaptor - spigot SWJ x FI BSP thread

Product code	DN x BSP	PN	OD	L1	L2	L3	Weight ea (kg)	Box qty
P0031515	15x½″	18	21	44	19	18	0.014	650
P0032020	20x¾″	18	27	47	21	18	0.022	400
P0032515	25x½″	18	33	50	25	17	0.022	400
P0032525	25x1″	18	33	55	24	22	0.038	230
P0033232	32x1¼″	18	42	62	29	24	0.064	140
P0034025	40x1″	18	48	62	33	23	0.058	140
P0034040	40X1½″	18	48	67	33	25	0.086	90
P0035025	50x1″	18	60	66	37	23	0.088	100
P0035040	50X1½″	18	60	71	37	25	N/A	N/A
P0035050	50x2″	18	60	75	37	29	0.131	55

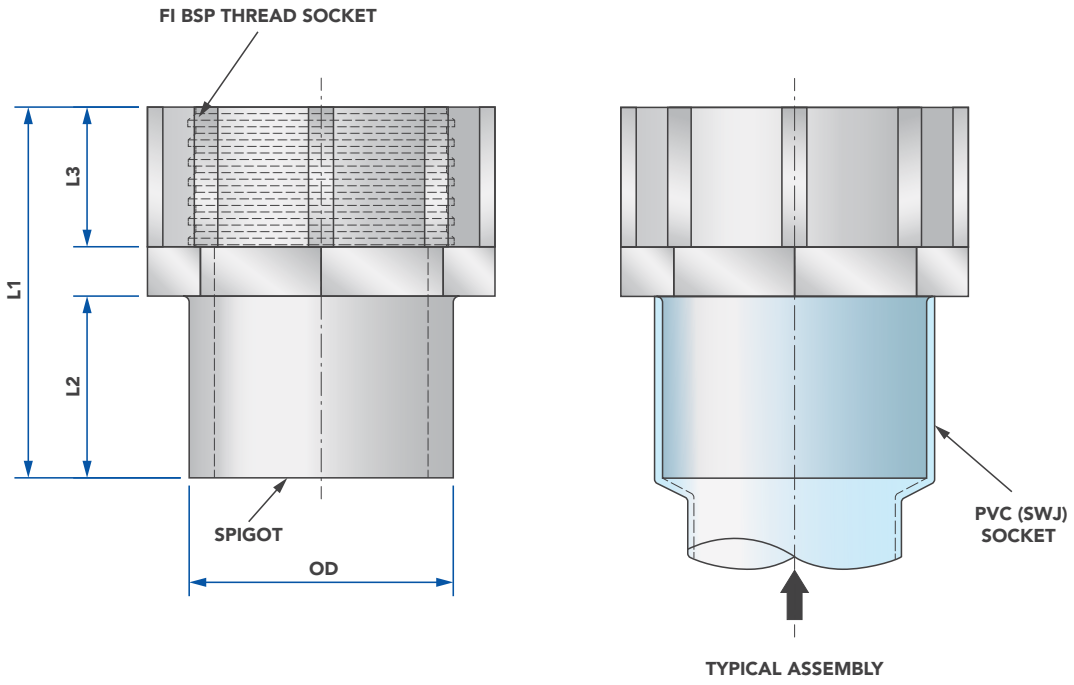

Table 10.3 - P005 PVC Pressure Reducing Bush - SWJ

Product code	DN x DN	PN	OD	ID	L1	L2	Weight ea (kg)	Box qty
P0052015	20 X 15	18	27	21	20	18	0.006	850
P0052515	25 X 15	18	33	21	23	20	0.018	750
P0052520	25 X 20	18	33	27	23	20	0.012	600
P0053225	32 X 25	18	42	33	28	23	0.022	370
P0054025	40 X 25	18	48	33	30	27	0.04	280
P0054032	40 X 32	18	48	42	30	27	0.02	280
P0055025	50 X 25	18	60	33	37	28	0.068	120
P0055040	50 x 40	18	60	48	37	34	0.056	120
P0056550	65 X 50	18	75	60	44	37	N/A	N/A
P0058050	80 X 50	18	89	60	52	37	0.17	55
P00510050	100 X 50	18	114	60	61	37	0.275	N/A
P00510080	100 X 80	18	114	89	63	50	0.355	30
P005150100	150 X 100	18	160	114	88	61	0.816	N/A

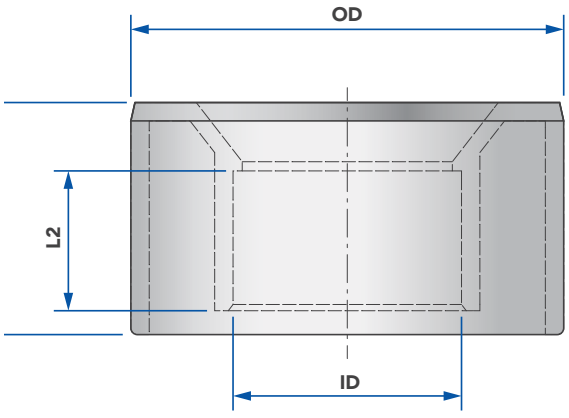

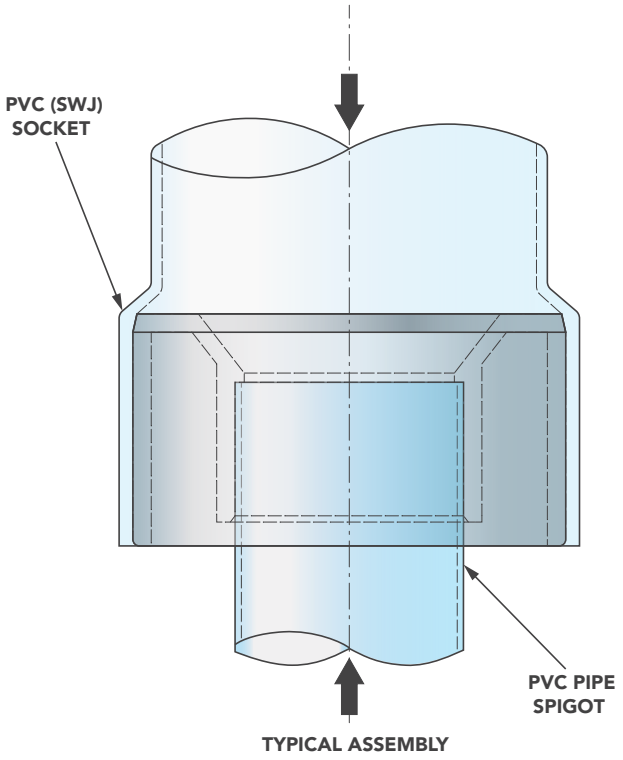

Table 10.4 - P006 PVC Pressure End Cap - SWJ

Product code	DN	PN	L1	L2	Weight ea (kg)	Box qty
P00615	15	18	38	25	0.014	600
P00620	20	18	32	20	0.018	500
P00625	25	18	25	23	0.024	300
P00632	32	18	35	28	0.033	220
P00640	40	18	38	31	0.046	160
P00650	50	18	52	37	0.091	80
P00665	65	18	75	48	N/A	N/A
P00680	80	18	73	54	0.273	36
P006100	100	18	91	64	0.599	20
P006150	150	18	126	88	2.087	5

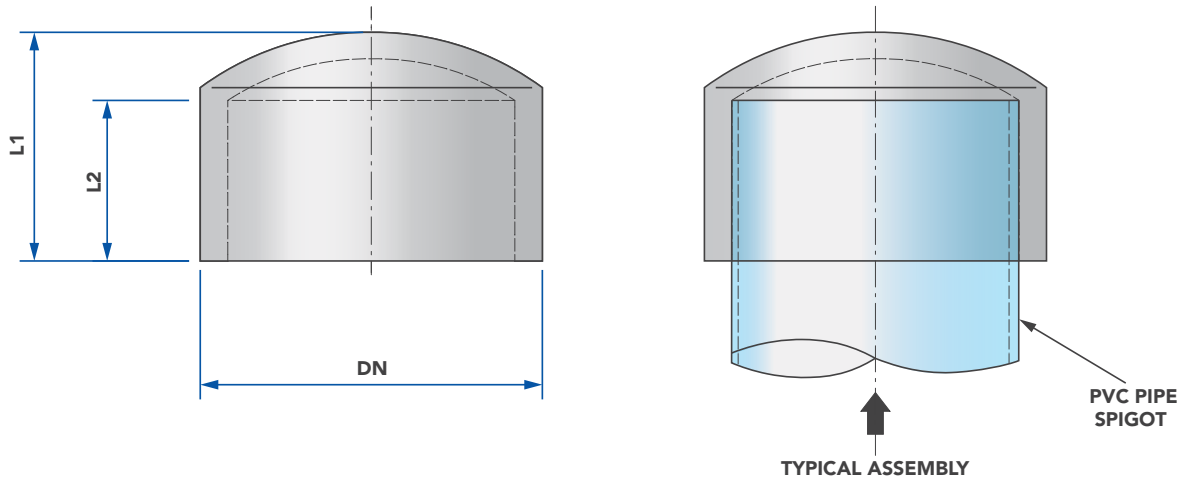

Table 10.5 - P007 PVC Pressure Coupling - SWJ

Product code	DN	PN	L1	L2	Weight ea (kg)	Box qty
P00715	15	18	56	26	0.02	420
P00720	20	18	43	20	0.02	400
P00725	25	18	49	23	0.031	230
P00732	32	18	58	28	0.042	140
P00740	40	18	66	31	0.064	80
P00750	50	18	76	36	0.118	50
P00765	65	18	103	48	0.285	28
P00780	80	18	108	51	0.381	18
P007100	100	18	128	62	0.758	10
P007150	150	18	184	88	2.15	2

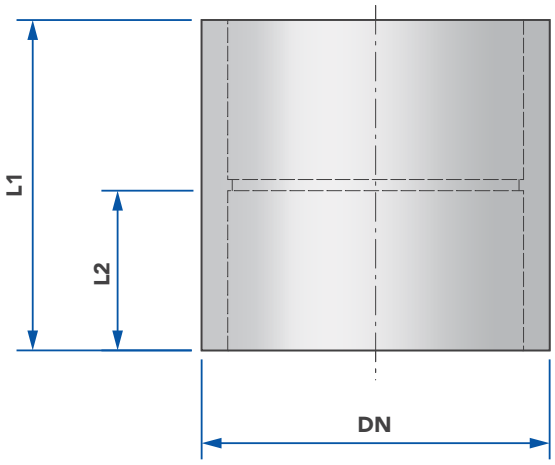

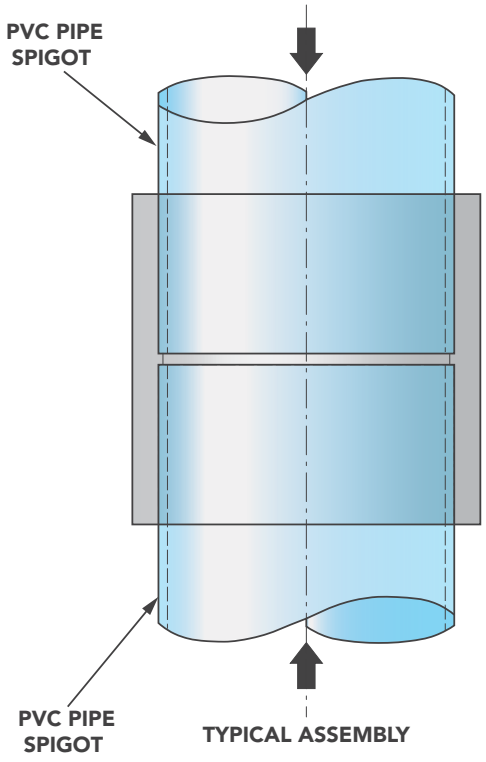

Table 10.6 - P008 PVC Pressure Reducing Coupling - SWJ

Product code	DN x DN	PN	L1	L2	L3	Weight ea (kg)	Box qty
P0082015	20 x 15	18	46	22	20	0.022	380
P0082515	25 x 15	18	48	23	20	0.024	250
P0082520	25 x 20	18	51	24	21	0.028	N/A
P0083225	32 x 25	18	70	33	30	0.065	N/A
P0084020	40 x 20	18	64	33	26	0.068	110
P0084025	40 x 25	18	65	32	24	0.066	N/A
P0084032	40 x 32	18	74	36	33	0.094	N/A
P0085025	50 x 25	18	71	37	28	0.106	N/A
P0085040	50 x 40	18	78	38	32	0.13	N/A
P0086550	65 x 50	18	94	48	40	0.236	N/A
P0088050	80 x 50	18	107	54	38	0.333	N/A
P0088065	80 x 65	18	115	54	46	0.385	N/A
P00810050	100 x 50	18	122	65	39	0.585	16
P00810080	100 x 80	18	117	64	52	0.635	16
P008125100	125 x 100	15	165	92	63	1.44	6
P008150100	150 x 100	12	175	103	61	1.803	4

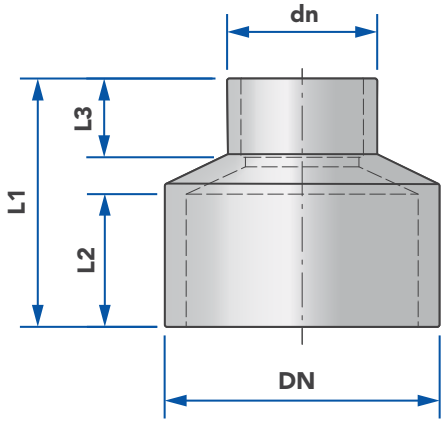

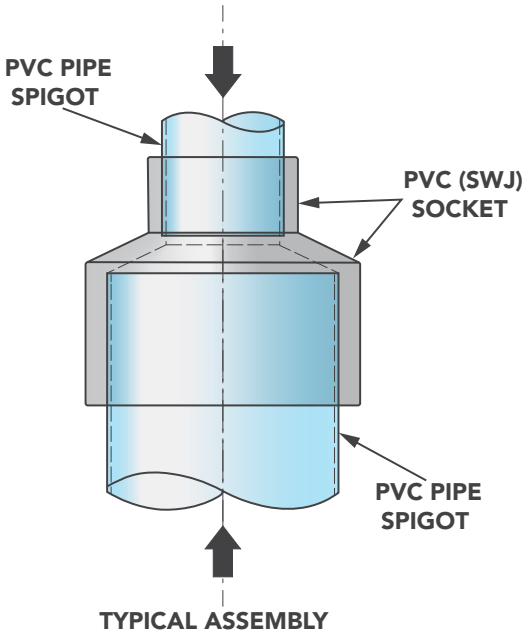

Table 10.7 - P010 PVC Pressure Elbow x 45°- SWJ

Product code	DN	PN	L1	L2	Weight ea (kg)	Box qty
P01015	15	18	28	20	0.021	400
P01020	20	18	30	23	0.03	260
P01025	25	18	35	24	0.047	150
P01032	32	18	45	35	0.08	80
P01040	40	18	52	40	0.119	50
P01050	50	18	60	45	0.221	25
P01080	80	18	80	53	0.572	12
P010100	100	15	90	61	1.102	6

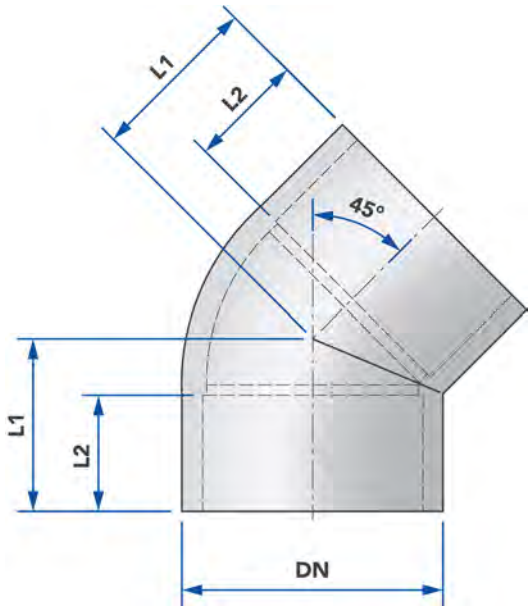

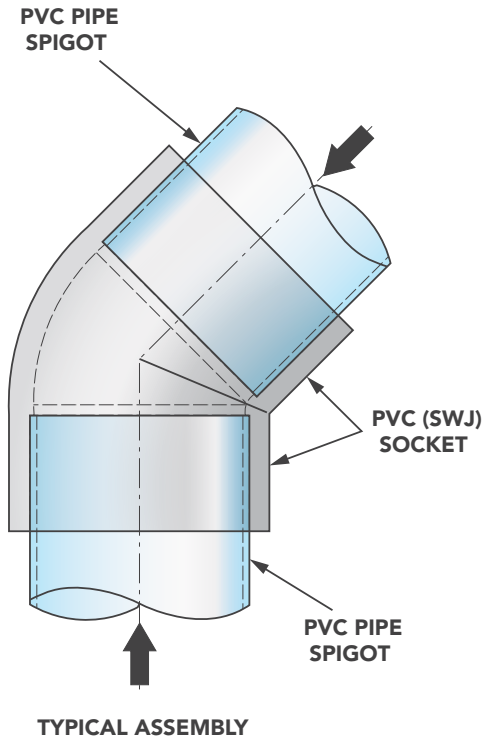

TYPICAL ASSEMBLY

Table 10.8 - P012 PVC Pressure Long Radius Bend - SWJ

Product code	DN	Angle (Ø)	PN	Radius R	Weight ea (kg)	Box qty
P0122090	20	90°	18	245	0.081	100
P0122590	25	90°	18	245	0.228	60
P0123290	32	90°	18	245	0.361	45
P0124045	40	45°	18	245	0.0447	N/A
P0124090	40	90°	18	245	0.467	30
P0125022	50	22½°	12	245	0.0615	40
P0125045	50	45°	12	245	0.37	30
P0125090	50	90°	12	300	0.575	12
P0126545	65	45°	12	300	0.915	20
P0126590	65	90°	12	300	1.619	10
P0128011	80	11¼°	12	600	0.812	N/A
P0128022	80	22½°	12	600	1.026	N/A
P0128045-	80	45°	12	600	#N/A	N/A
P0128090	80	90°	12	600	3.2	N/A
P01210011	100	11¼°	12	600	1.688	N/A
P01210022	100	22½°	12	600	2	9
P01210045	100	45°	12	600	3.709	N/A
P01210090	100	90°	12	600	#N/A	N/A
P01215022	150	22½°	12	800	4.8	N/A
P01215045	150	45°	12	800	7.303	N/A
P01215090	150	90°	12	800	12.159	N/A
P01220090	200	90°	9	900	32.67	N/A

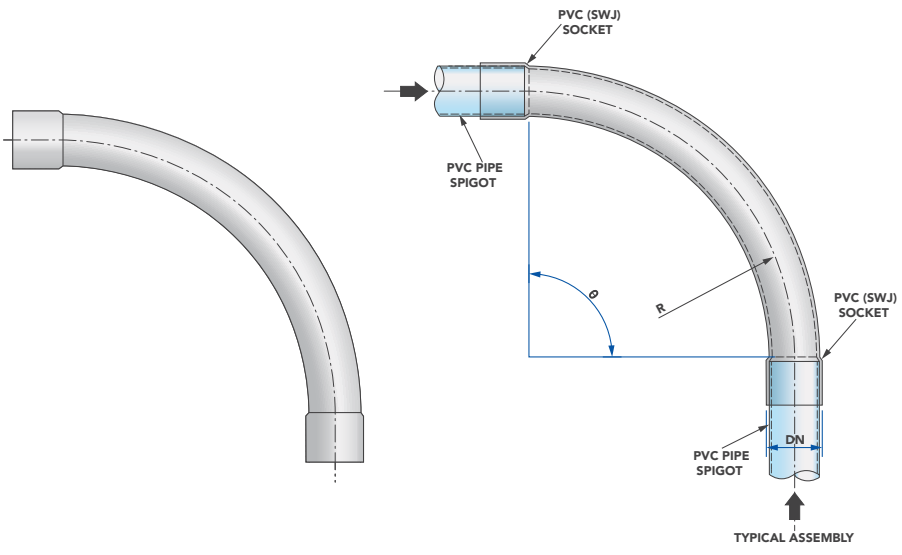

Table 10.9 - P013 PVC Pressure Elbow x 90° - SWJ

Product code	DN x DN	PN	L1	L2	L3	Weight ea (kg)	Box qty
P0131515	15	18	28	17		0.02	440
P0132015	20 x 15	18	37	22	18	N/A	N/A
P0132020	20	18	36	20		0.036	N/A
P0132520	25 x 20	18	44	25	25	0.07	N/A
P0132525	25	18	42	23		0.06	N/A
P0133232	32	18	48	27		0.092	N/A
P0134040	40	18	54	30		0.138	N/A
P0135050	50	18	70	37		0.207	N/A
P0136565	65	15	87	48		0.454	N/A
P0138080	80	15	110	63		0.701	N/A
P013100100	100	15	124	64		1.8	5
P013150150	150	15	175	88		3.086	2

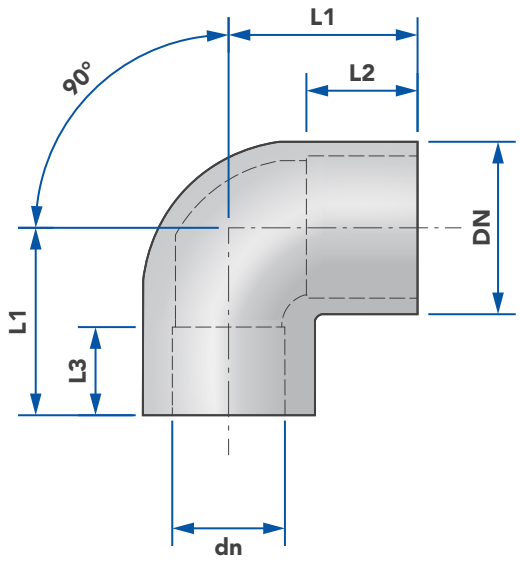

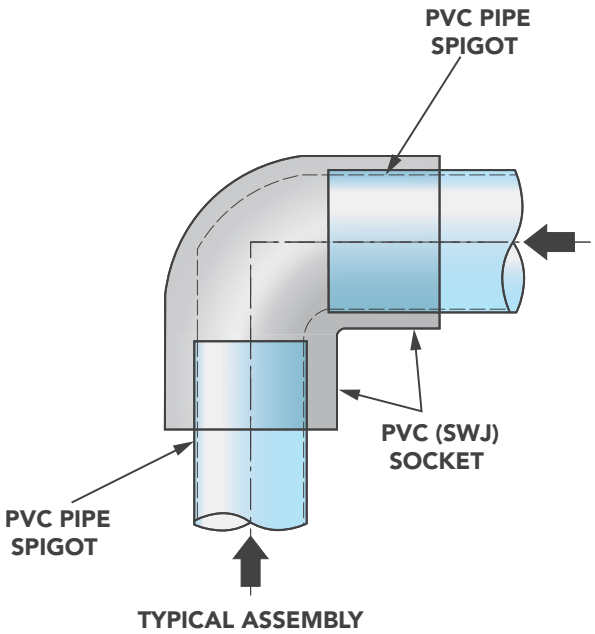

Table 10.10 - P015 PVC Pressure Elbow - SWJ x FI BSP Thread

Product code	DN x BSP	PN	L1	L2	L3	Weight ea (kg)	Box qty
P0151515	15 x ½"	18	29	18	16	0.021	380
P0152015	20 x ½"	18	36	20	18	0.034	250
P0152020	20 x ¾"	18	36	20	19	0.04	200
P0152515	25 x ½"	18	36	22	18	0.039	200
P0152520	25 x ¾"	18	41	24	24	0.05	150
P0152525	25 x 1"	18	44	24	24	0.067	120
P0153232	32 x 1¼"	18	54	32	31	0.118	70
P0154040	40 x 1½"	18	58	33	33	0.158	40

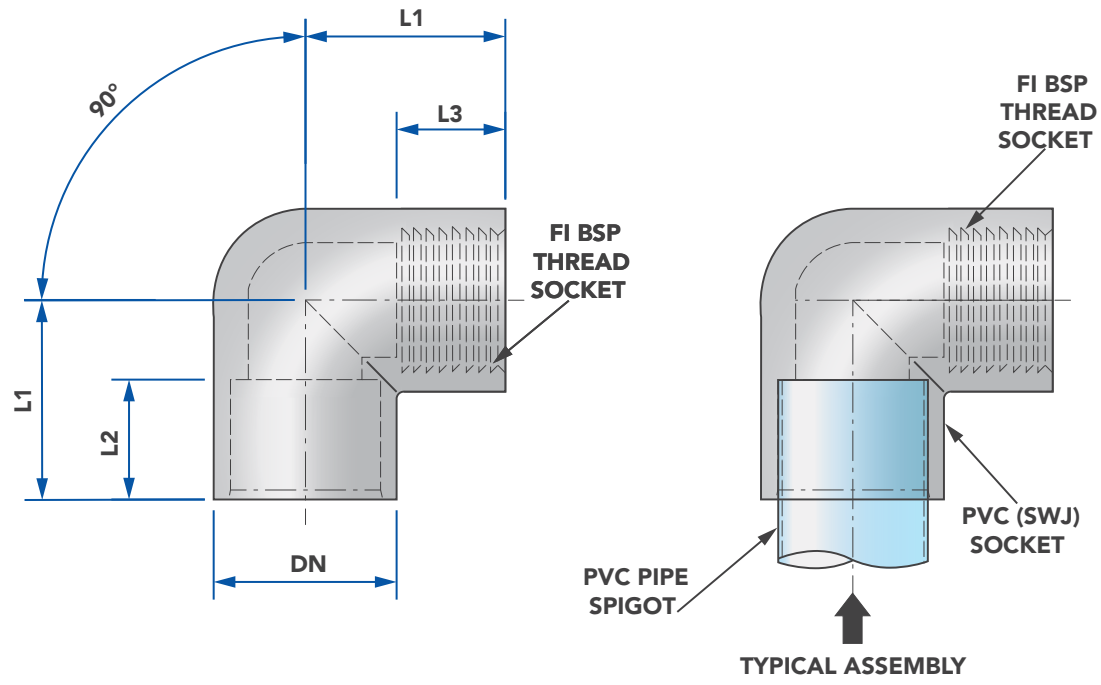

Table 10.11 - P016 PVC Pressure Full Face Flange - SWJ x Flange

Product code	DN	PN	OD	L1	L2	t	Weight ea (kg)	Box qty
P01650	50	18	150	43	37	12	0.306	30
P01665	65	15	165	54	48	12	0.41	20
P01680	80	15	185	68	60	13	0.603	12
P016100	100	18	215	69	61	14	0.922	9
P016150	150	18	280	98	88	20	2.004	4

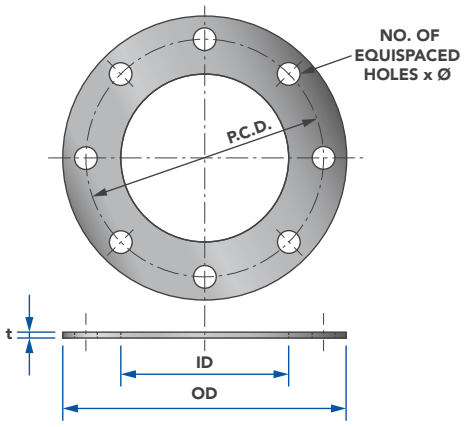

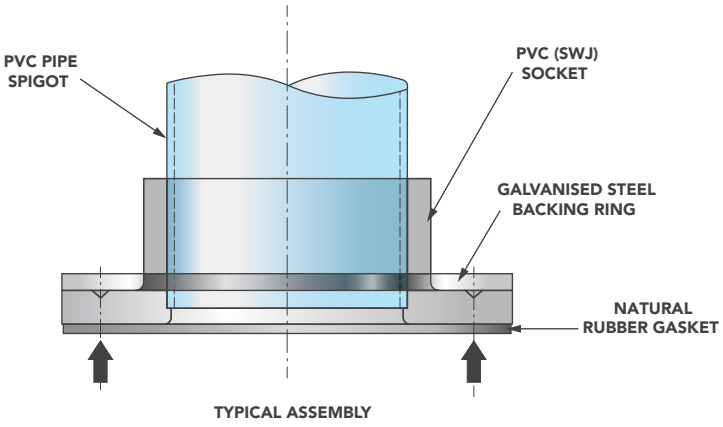

Table 10.12 - P016**R Galvanized Steel Backing Ring - Drilled Table "E"

Product code	DN	OD	ID	PCD	t	No. Holes x Dia	Weight ea (kg)	Box qty
P01650R	50	150	75	114	6	4 x 18	N/A	N/A
P01665R	65	165	93	127	6	4 x 18	1.6	N/A
P01680R	80	185	110	146	8	4 x 18	1.15	N/A
P016100R	100	215	138	178	10	8 x 18	1.55	60
P016150R	150	280	195	235	10	8 x 22	2.41	N/A

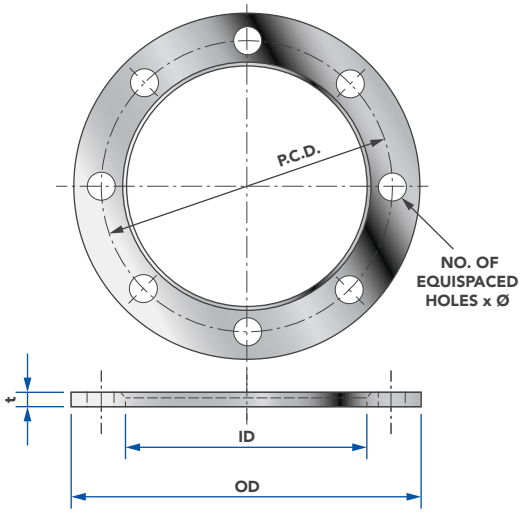

Table 10.13 - P016**S PVC Pressure Stub Flange - SWJ x Flange

Product code	DN	PN	OD	L1	L2	Weight ea (kg)	Box qty
P01650S	50	15	97	43	31	N/A	N/A
P01665S	65	15	106	55	48	0.188	42
P01680S	80	15	129	69	60	0.329	25
P016100S	100	15	160	77	63	N/A	N/A
P016150S	150	15	215	98	88	N/A	N/A

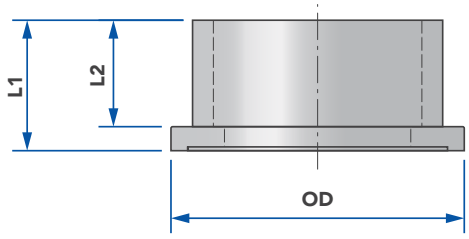

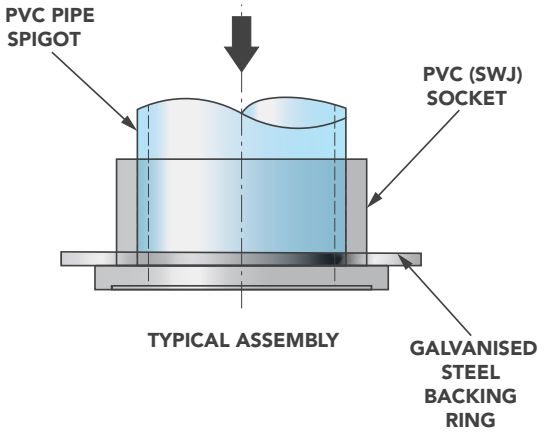

Table 10.14 - P016**G Full Face Natural Rubber Gasket - Table "E"

Product code	DN	OD	ID	PCD	T	No. holes x dia	Weight ea (kg)	Box qty
P01650G	50	150	60	114	3	4 x 18	0.065	N/A
P01665G	65	165	70	127	3	4 x 18	0.065	N/A
P01680G	80	185	88	146	3	4 x 18	0.12	N/A
P016100G	100	215	114	178	3	8 x 18	0.1	N/A
P016150G	150	280	168	235	3	8 x 22	0.15	N/A

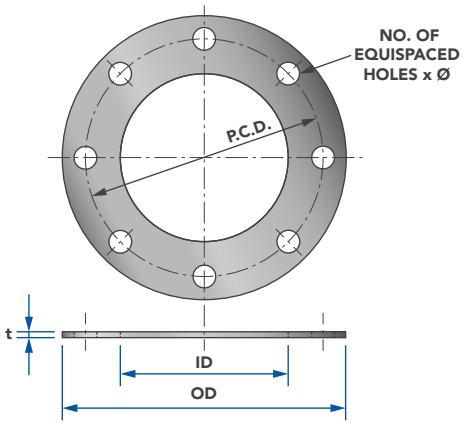

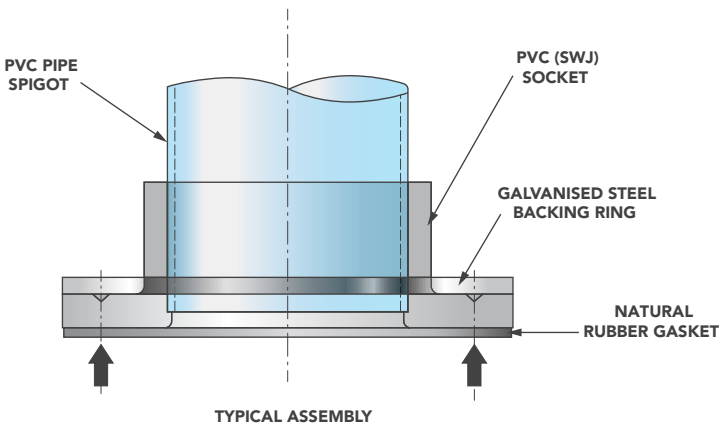

Table 10.15 - P017 PVC Pressure Socket adaptor - SWJ Socket x MI BSP Thread

Product code	DN x BSP	PN	L1	L2	L3	Weight ea (kg)	Box qty
P0171515	15 x ½"	18	49	17	25	0.017	550
P0172020	20 x ¾"	18	47	18	25	0.02	400
P0172525	25 x 1"	18	50	21	23	0.028	250
P0173232	32 x 1¼"	18	63	23	29	0.069	130
P0174040	40 x 1½"	18	67	23	32	0.091	100
P0175050	50 x 2"	18	78	27	39	0.164	50
P0176565	65 x 2½"	18	91	28	52	N/A	N/A
P0178075	80 x 3"	18	94	35	51	0.357	30
P017100100	100 x 4"	18	111	40	61	0.705	16

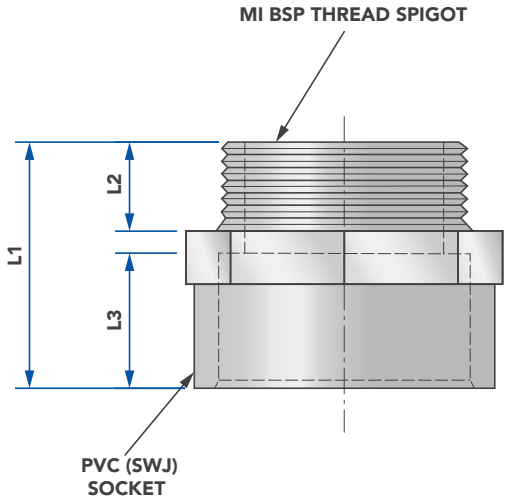

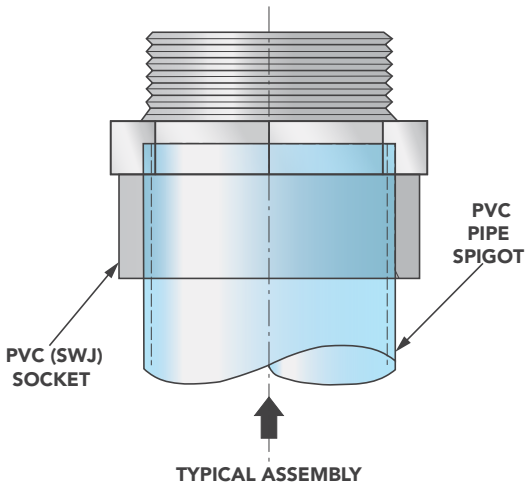

Table 10.16 - P018 PVC Pressure Socket adaptor - SWJ Socket x FI BSP Thread

Product code	DN x BSP	PN	L1	L2	L3	Weight ea (kg)	Box qty
P0181515	15 x ½"	18	46	19	25	0.02	500
P0182020	20 x ¾"	18	48	19	26	0.027	320
P0182525	25 x 1"	18	58	26	30	0.047	180
P0183232	32 x 1¼"	18	59	26	31	0.07	120
P0184040	40 x 1½"	18	67	27	37	0.106	80
P0185050	50 x 2"	18	71	27	40	0.162	50
P0188075	80 x 3"	18	94	36	51	N/A	N/A
P018100100	100 x 4"	18	112	41	61	0.764	12

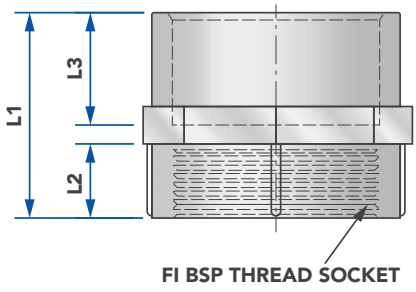

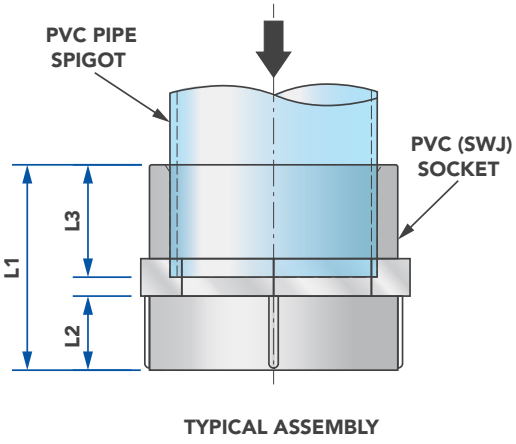

Table 10.17 - P019 PVC Pressure Tee - SWJ

Product code	DN x DN	PN	L1	L2	L3	L4	L5	Weight ea (kg)	Box qty
P0191515	15 x 15	18	56	28	28	17	17	0.025	300
P0192015	20 x 15	18	75	37	37	23	23	N/A	N/A
P0192020	20 x 20	18	72	36	36	20	20	0.044	150
P0192515	25 x 15	18	76	38	36	24	28	0.056	140
P0192520	25 x 20	18	87	43	43	27	28	0.089	90
P0192525	25 x 25	18	84	42	42	23	23	0.074	100
P0193220	32 x 20	18	100	50	47	29	22	N/A	N/A
P0193225	32 x 25	18	100	50	50	29	25	N/A	N/A
P0193232	32 x 32	18	96	48	48	27	27	0.114	60
P0194015	40 x 15	18	99	49	49	32	19	N/A	N/A
P0194020	40 x 20	18	99	49	51	32	22	0.138	50
P0194025	40 x 25	18	96	48	57	33	29	0.151	40
P0194040	40 x 40	18	108	54	54	30	30	0.164	30
P0195020	50 x 20	18	120	60	60	38	22	0.254	25
P0195025	50 x 25	18	120	60	60	38	24	0.256	25
P0195032	50 x 32	18	119	59	63	37	28	N/A	N/A
P0195040	50 x 40	18	125	62	64	37	31	0.257	N/A
P0195050	50 x 50	18	140	70	70	37	37	0.164	20
P0196565	65 x 65	15	178	89	89	48	48	0.608	12
P0198040	80 x 40	18	200	100	81	53	33	0.807	10
P0198050	80 x 50	18	200	100	87	53	38	0.85	9
P0198080	80 x 80	18	200	100	98	53	51	0.914	6
P01910050	100 x 50	18	250	125	125	63	37	2.295	4
P01910080	100 x 80	18	250	125	125	63	51	2.375	4
P019100100	100 x 100	15	250	125	125	63	64	1.992	4
P019150100	150 x 100	12	350	175	145	88	61	4.198	1
P019150150	150 x 150	12	350	175	175	88	88	4.798	1

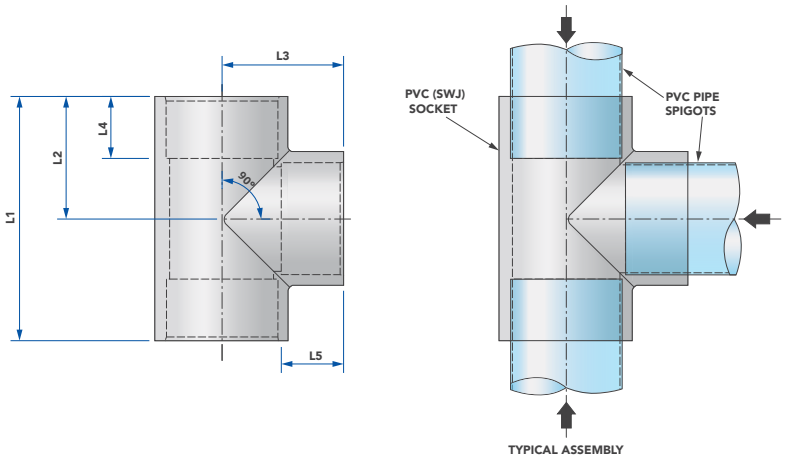

Table 10.18 - P021 PVC Pressure Tee - SWJ Socket x FI BSP Thread

Product code	DN x DN	PN	L1	L2	L3	L4	L5	Weight ea (kg)	Box qty
P0211515	15 x ½"	18	58	29	29	18	16	0.025	280
P0212015	20 x ½"	18	72	36	36	20	19	0.041	200
P0212020	20 x ¾"	18	72	36	36	20	19	0.042	200
P0212515	25x ½"	18	72	36	36	23	19	0.046	125
P0212520	25 x ¾"	18	87	44	44	29	20	0.082	100
P0212525	25 x 1"	18	94	47	47	29	23	0.097	80
P0213215	32 x ½"	18	87	44	42	31	16	0.097	70
P0213220	32 x ¾"	18	93	47	48	32	20	N/A	N/A
P0213225	32 x 1"	18	100	50	51	32	22	N/A	N/A
P0214015	40 x ½"	18	99	49	49	32	19	0.135	50
P0214020	40 x ¾"	18	99	49	51	32	22	0.139	N/A
P0214025	40 x 1"	18	103	52	54	33	23	0.154	40
P0215015	50 x ½"	18	98	49	52	37	16	0.172	40
P0215020	50 x ¾"	18	104	52	56	37	19	0.193	30
P0215025	50 x 1"	18	111	56	60	37	22	0.213	30

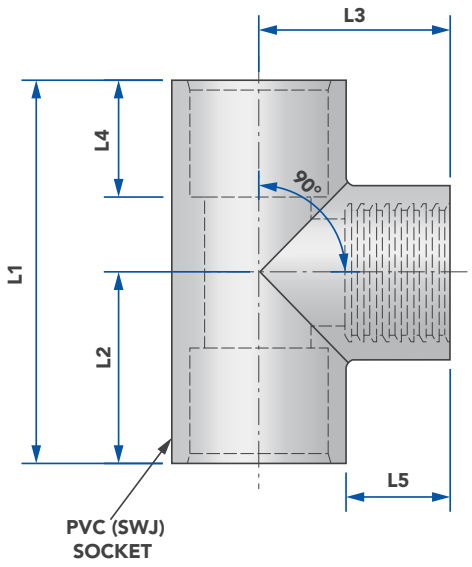

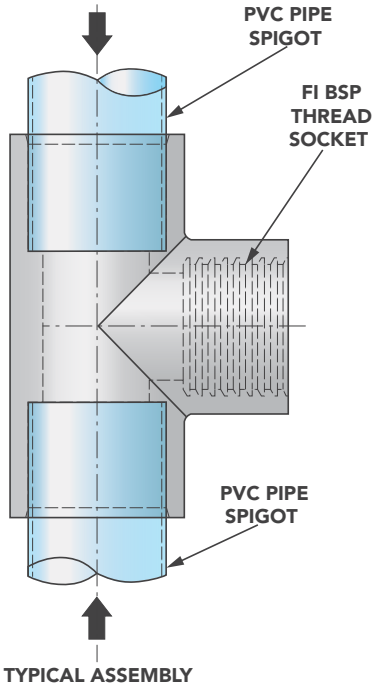

Table 10.19 - P022 PVC Pressure Barrel Union - SWL Socket x SWJ Socket

Product code	DN x DN	PN	L1	L2	Weight ea (kg)	Box qty
P02215	15	18	69	27	N/A	N/A
P02220	20	18	68	27	0.037	140
P02225	25	18	72	28	0.119	80
P02232	32	18	77	32	0.165	60
P02240	40	18	81	33	0.19	45
P02250	50	18	89	37	0.32	30

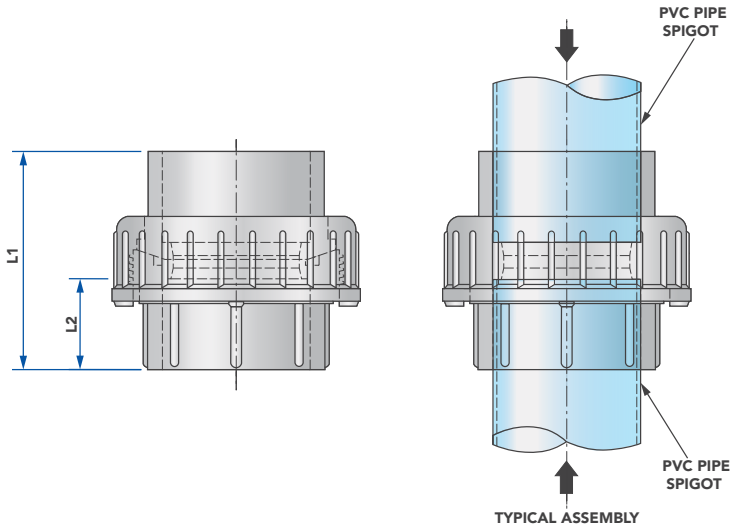

Table 10.20 - P023 PVC Pressure Plug - MI BSP

Product Code	BSP	PN	L1	L2	Weight ea (kg)	Box qty
P02315	½"		25	20	0.01	900
P02320	¾"		25	20	N/A	N/A
P02325	1"		25	19	N/A	N/A

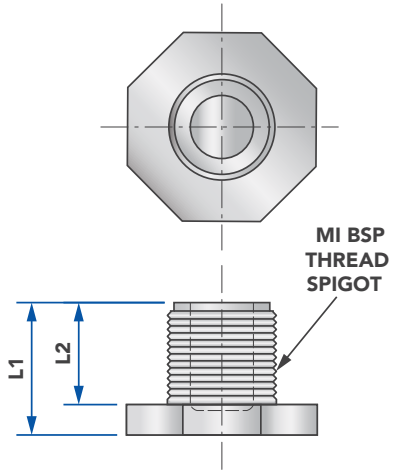

Table 10.21 - P024 PVC Pressure Screwed Bush - FI BSP x MI BSP

Product code	BSP	PN	L1	L2	Weight ea (kg)	Box qty
P0242515	¾" x ½"	18	25	18	N/A	N/A
P0242520	1" x ¾"	18	34	24	N/A	N/A

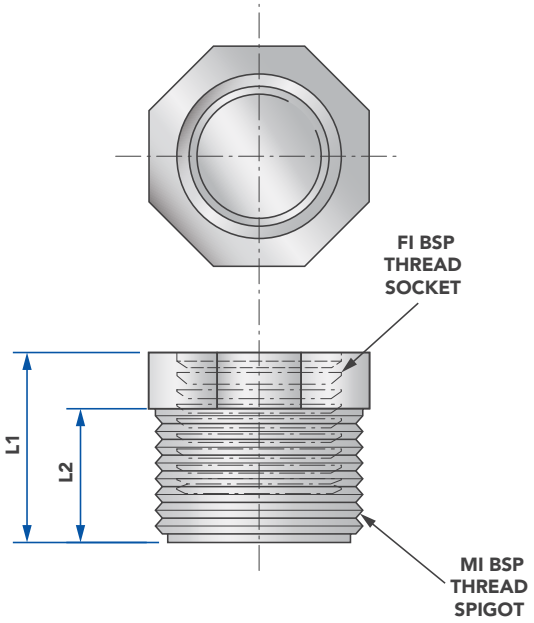

Table 10.22 - P053 PVC Saddle

Product Code	DN	D	L1	L2	L3	L4	t	Weight ea (kg)	Box qty
P05315	15	21	58	40	19	25	4	N/A	N/A
P05320	20	27	67	43	24	30	5	N/A	N/A

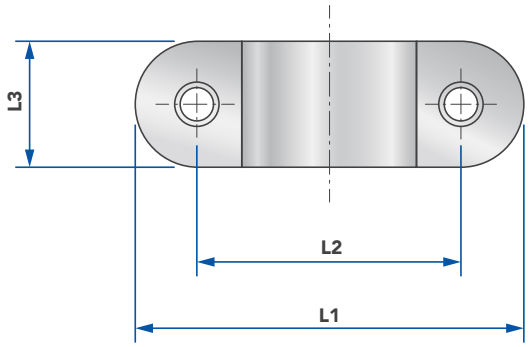

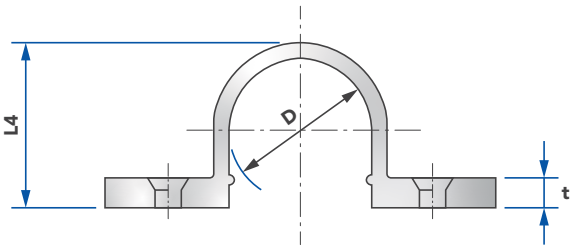

10.3 Raccord plast large diameter PVC-U fittings

Table 10.23 - Raccord Caps

Product code	DN	PN
P00610200	200	10

Table 10.24 - Raccord Couplings

Product code	DN	PN
P00705375	375	5
P00708300	300	8
P00710200	200	10
P00710225	225	10
P00710250	250	10

Table 10.25 - Raccord 45D Elbows

Product code	DN	PN
P01005375	375	5
P01008300	300	8
P01010200	200	10
P01010225	225	10
P01010250	250	10

Table 10.26 - Raccord 90D Elbows

Product code	DN	PN
P01305375	375	5
P01308300	300	8
P01310200	200	10
P01310225	225	10
P01310250	250	10

Table 10.27 - Raccord Flange Table E & D CW PVC Ring

Product code	DN	PN
P01605375R	375	5
P01605375S	375	5
P01608250	250	8
P01608300	300	8
P01610150	150	10
P01610200	200	10
P01610225	225	10

Table 10.28 - Raccord Bush MF MF

Product code	DN	PN
P00505375250	375x250	5
P00505375300	375x300	5
P00508300150	300x150	8
P00508300200	300x200	8
P00508300225	300x225	8
P00508300250	300x250	8
P00510200150	200x150	10
P00510225150	225x150	10
P00510225200	225x200	10
P00510250150	250x150	10
P00510250200	250x200	10
P00510250225	250x225	10

Table 10.29 - Raccord Reducing Coupling FF

Product code	DN	PN
P00805375250	375x250	5
P00805375300	375x300	5
P00808300150	300x150	8
P00808300200	300x200	8
P00808300250	300x250	8
P00810200150	200x150	10
P00810225200	225x200	10
P00810250200	250x200	10
P00810250225	250x225	10

Table 10.30 - Raccord Tee FFF

Product code	DN	PN
P01904375375	375	4
P01908300300	300	8
P01910250250	250	10
P01910225225	225	10
P01910200200	200	10

Table 10.31 - Raccord Reducing Tee FFF

Product code	DN	PN
P01904375300	375x300	4
P01908300150	300x150	8
P01908300200	300x200	8
P01910200150	200x150	10
P01910250150	250x150	10
P01910250200	250x200	10

12.0 Ductile iron fittings
Iplex PVC-U, PVC-M, PVC-O pressure systems

12.1 Ductile iron fittings S1 and S2

Standard socketed fittings compliant with *AS/NZS 2280 Ductile Iron Pressure Pipes and Fittings* and WSAA TN2 are suitable for Apollo PVC-O and Rhino PVC-M Series 2, as well as PVC-U Series 1 pressure pipes.

Iplex offers a comprehensive range of bends, tees, reducers, and flange-spigot pieces with rubber ring sockets in sizes from DN100 to DN375. Please refer to the Iplex Ductile Iron Technical Guide.

For specific guidelines, refer to the Water Services Association of Australia (WSAA) TN2 'Guidelines for the Use of Non-Metallic Pipes with Ductile Iron Elastomeric Joint Fittings.'

If you have any questions, please contact Iplex to confirm the suitability of any particular range of fittings.

Corrosion Protection for Ductile Iron Fittings:

- Polymeric coating (preferred)
- Internal cement lining and external polyethylene wrap
- Epoxy coating



iplex®